Xflight Technologies LLC

AUTOPILOT / TRIM User & Installation Guide

Version 4.3

(Pixhawk 4 Flight Controller)

December 2020

Xflighttech.com

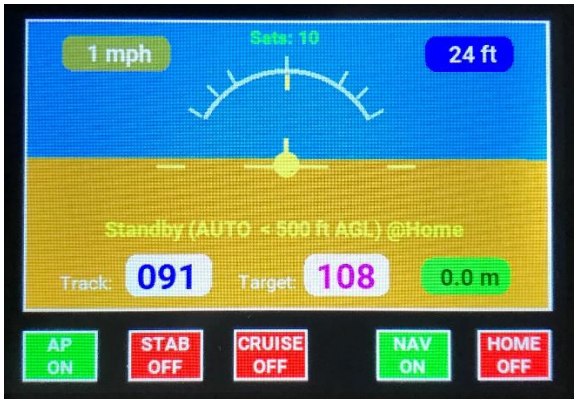

A. Terms, Conditions and Warranty.

These products are only intended to be used in LSA Class Experimental Aircraft or Ultralights (as defined by the FAA in the USA) under the full responsibility of the pilot. AHRS and Autopilot components are intended to be used for informational purposes or to manipulate secondary control surfaces only, allowing the pilot full manual control of the aircraft

See Appendix A for details

B. Setup and Connection:

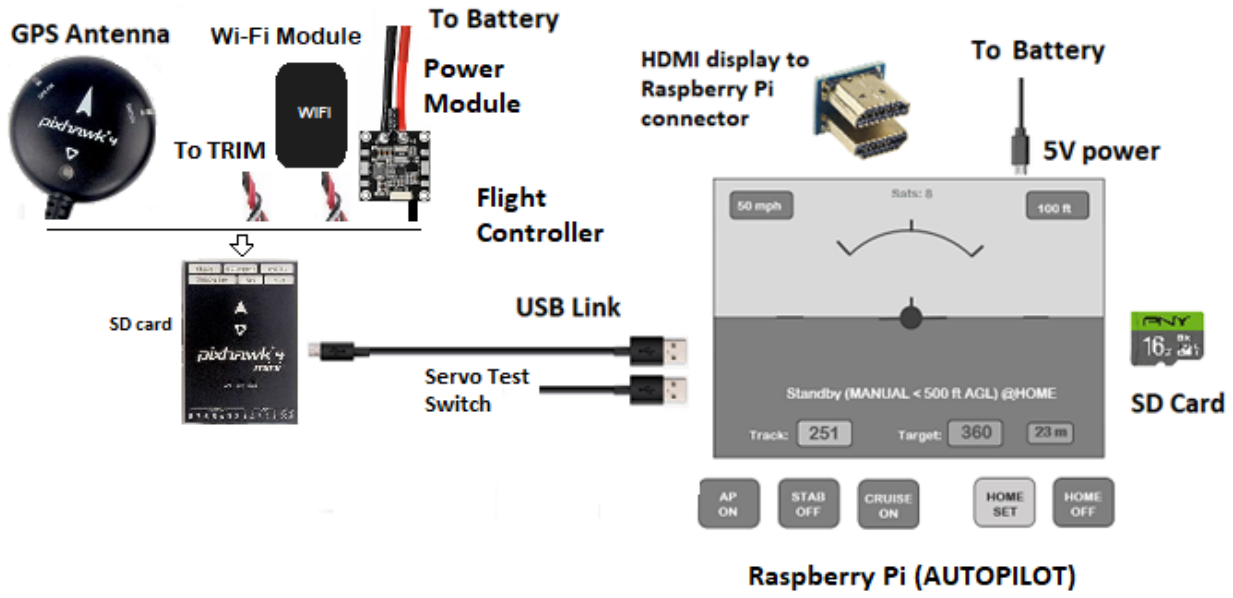

1. Ensure the Display is firmly seated and connected via the HDMI connector
2. Connect the GPS antenna to the Flight Controller GPS/12C socket
3. Connect the Flight Controller micro USB Link to one of the Raspberry Pi (AUTOPILOT) USB sockets
4. Connect the 5v DC power supply to the Raspberry Pi (AUTOPILOT) micro USB connector
   (A backup power supply may be used and connected to the touchscreen micro USB connector)
5. Connect the Power Module to the Flight Controller and battery (via AP switch & fuse circuit)
6. Safety Enable should already be connected from the Raspberry Pi USB cable to the GPS Antenna

Copyright © 2019 Xflight Technologies LLC, Florida, USA

7. The Test Switch should already be connected to the Raspberry Pi USB cable (the switch can be removed once calibration is complete)

8. Connect the Wi-Fi module to the TELEM1 port of the Flight Controller

9. Connect the TRIM system to the 5v power supply and to the Flight Controller

10. Connect the yoke trim switches to the TRIM System (see details in section F)

11. Make sure the SD card (AUTOPILOT software) is firmly seated inside the Raspberry Pi and the SD card in the Flight Controller is also firmly seated (used for logging)

C. Installation Overview

Additional details in section F.

1. Mount the Flight Controller horizontally facing forward, sitting on a padded or foam base to reduce vibration. (Adjustments for setting perfect level and for tail-wheel aircraft will be covered later, under section G - Calibration).

2. Mount the GPS antenna on the dash or somewhere with line of sight to the sky, facing forward.

3. Connect the AUTOPILOT power supply and TRIM System power supply to the battery via a separate switch and 2A fuse. Use a separate switch and fuse for the servo power circuits.

4. When installing the AUTOPILOT behind the instrument panel, it is necessary to ensure there is an insulated layer between the touchscreen display surface and the metal panel for proper operation. The plastic frame of the case makes for a good insulating layer.

Copyright © 2019 Xflight Technologies LLC, Florida, USA

D. Startup

1. Leave servos switched off until you are ready to use the Autopilot in flight. Always power up the AUTOPILOT circuit first.

2. Make sure you are outside with a view to the sky. Upon startup the AUTOPILOT will connect to the Flight Controller, maintaining a heartbeat (ignore the login prompt). If the Flight Controller is not able to lock onto more than 5 satellites, the AUTOPILOT will keep trying, via a countdown. If it still cannot get a good lock after the countdown, it will start up anyway, and you will be able to see the satellite count for yourself. It will be red if below 6, otherwise green. A red cross will appear if the satellite count is less than 5. (A solid green light on the GPS antenna also indicates satellites have been acquired). If the satellite count is zero you will need to restart.

3. Make sure the Flight Controller remains stable during startup. Once the AUTOPILOT has started it will lock in the current GPS location, and use this as its Home reference.

4. If either the Flight Controller link is broken (loss of heartbeat) or the satellite count falls below 5, you will see a large red cross appear on the display and the AUTOPILOT will disengage. The AHRS is still working, but the flight data readings cannot necessarily be trusted. Once the AUTOPILOT has reconnected, and/or the satellite count goes back up to 5 or above, the AUTOPILOT will resume normal operation.

Copyright © 2019 Xflight Technologies LLC, Florida, USA

E. Operation:

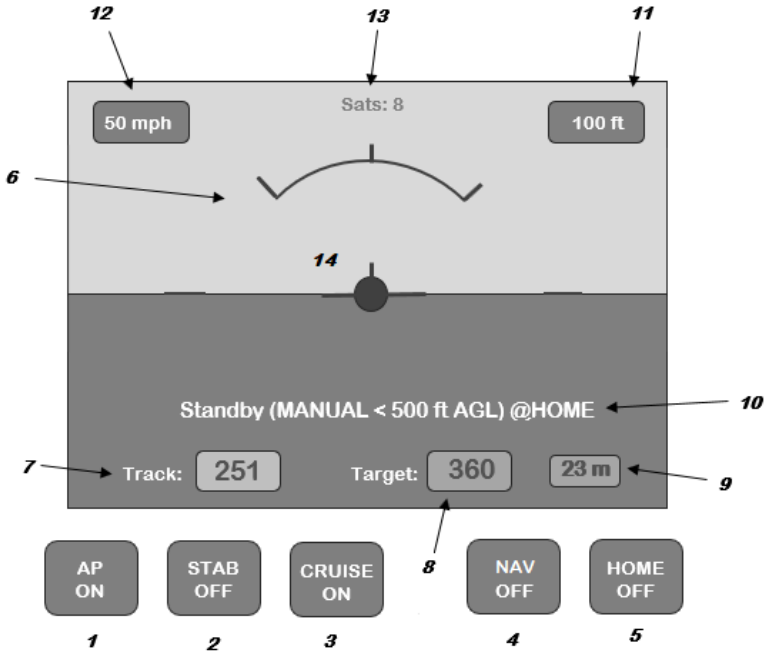

When operating normally the display will provide a smooth indication of attitude as well as the various flight data parameters detailed below.

1. AUTOPILOT ON/OFF
    - Switches the AUTOPILOT ON in Manual flight mode, ready for an automated flight mode to be set (i.e. STAB, CRUISE, NAV, HOME). This also enables the Servo PWM signals, starts flight logging (and enables the Trim switches if applicable)
    - Switches the AUTOPILOT OFF, switches back to Manual flight mode, setting all other automated modes OFF. This also disables the Servo PWM signals, stops flight logging

2. STABILIZATION Mode (Wings Level) ON/OFF
    - Seeks to maintain wings level. Does not hold specific heading/altitude

3. CRUISE Mode (Heading & Altitude) ON/OFF
    - Seeks to maintain current heading (Target) and current Altitude
    - The minimum altitude is 500 feet AGL for this mode at the Home location. (If below 500 feet AGL at the Home location, the AUTOPILOT will climb to this minimum altitude when in Cruise mode)

4. NAV Mode WAIT/ON/OFF
    - Switches the AUTOPILOT into NAV WAIT (olive) mode, waiting for the mobile app to upload and start a flight plan / mission

Copyright © 2019 Xflight Technologies LLC, Florida, USA

- Once the flight plan / mission has been uploaded and started will switch to ON (Green) and start to execute the mission
- OFF (red) switches NAV mode off and returns to MANUAL flight mode

5. HOME Mode ON/OFF
    - Return to Home location or RTL (Return To Land), at current altitude
    - The aircraft will turn on to a heading back to the Home location with a maximum bank angle of **20** degrees (configurable). When within **1** mile (configurable) of the location it will perform a **1-mile** left hand (configurable) loiter circle and remain overhead the Home location until the mode is deselected.
    - This button will flash green/blue when within two miles of Home location

6. Bank angle graduations: 0, 30, 45, 60 degrees

7. Current heading (continuously displayed, regardless of mode)

8. Target Track (to Home location when in Home mode or Cruise track when in Cruise mode)

9. Ground distance to Home location in miles (continuously displayed, regardless of mode)

10. AUTOPILOT Status
    - This displays current Flight Controller status - STANDBY/ACTIVE, current AUTOPILOT mode and if at Home location
    - STANDBY: Aircraft is on the ground, ready for flight
    - ACTIVE: System is active, and aircraft may already be in flight

11. GPS Altitude above mean sea level (AMSL) in feet (continuously displayed, regardless of mode)

12. Groundspeed in miles per hour (continuously displayed, regardless of mode)

13. Number of satellites locked on. If this drops below 5, you will see a large red cross appear on the display and the AUTOPILOT will disengage (the flight data readings and AHRS will continue to update but cannot necessarily be trusted). Once the satellite count goes back up to 5 or above, the AUTOPILOT will be available again

14. When on the ground touching the center yellow reference plane will calibrate the AHRS to straight & level (AP OFF mode)

15. TRIM System
    - A single press of a yoke switch will move the selected control surface a small amount
    - Continuously pressing a yoke switch will continuously move the selected control surface
    - Simultaneously pressing two opposing yoke switches (pitch up & pitch down **or** roll left & roll right) will centralize the selected control surface

Copyright © 2019 Xflight Technologies LLC, Florida, USA

F. Physical Installation

Wire AUTOPILOT and servo power circuits separately with their own fuse and switch:

AUTOPILOT, Flight Controller Power Module and touchscreen (and optional TRIM system)	Switch and 2A fuse
Pitch and Roll Servos	Switch and fuse as per servo requirements

A backup power supply may be used and connected to the touchscreen micro USB connector.

1. AUTOPILOT

The optimal location for the AUTOPILOT is behind the instrument panel. (Make sure to leave sufficient room for the USB connections on the left side and micro USB power connector on top). The rectangular cut-out required will be approx. 3 inches x 2 1/4 inches (76mm x 57mm). Metal instrument panels will require an insulated layer between the touchscreen display surface and the panel for proper operation. The plastic frame of the case provided makes for a good insulating layer. Simply remove the 4 screws, mount the AUTOPILOT behind the instrument panel with the frame in place, and secure the AUTOPILOT with the screws from the front of the instrument panel.

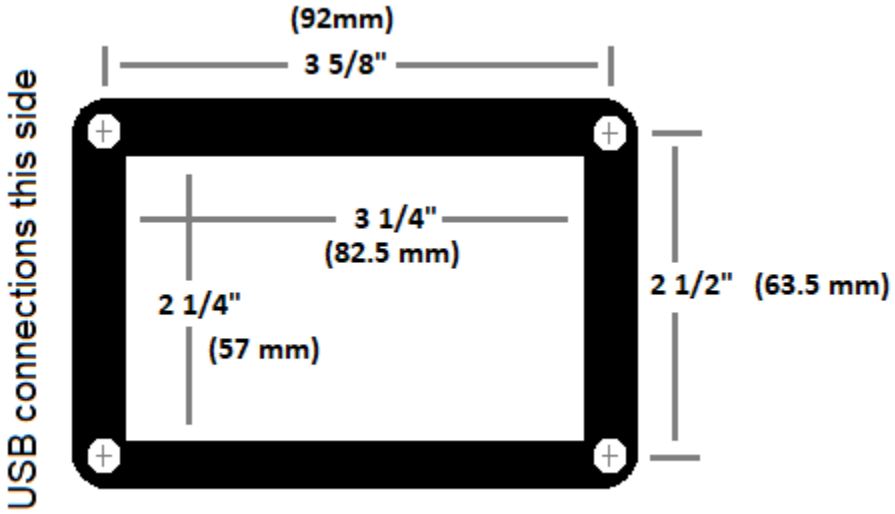

Overall dimensions of the AUTOPILOT (Raspberry Pi) + Screen are approx. 4” (102mm) x 3” (76mm) x 1.5” (38mm)

Copyright © 2019 Xflight Technologies LLC, Florida, USA

2. Flight Controller

The Flight Controller needs to be close to the AUTOPILOT and the GPS antenna which is typically mounted on the dashboard. Mount the Flight Controller horizontally and flat facing forward, sitting on a padded or foam base (provided) to reduce vibration, and make sure it cannot move in flight.
The GPS antenna needs to be installed facing forward as it also has a built-in compass and must have a good line of sight to the sky. Satellite reception is good through glass, plastic, wood, fabric, etc., but not through conducting surfaces such as metal.

The Flight Controller (Pixhawk 4) dimensions are 2.25” (57mm) square x 1.5” (38mm)

The GPS antenna dimensions is 2” diameter (50mm)

Copyright © 2019 Xflight Technologies LLC, Florida, USA

3. AUTOPILOT / TRIM and Flight Controller Wiring

The Flight Controller, AUTOPILOT and TRIM System all need to be on their own separate switched and fused (2A) circuit. They need to be powered up at the same time. The AUTOPILOT / TRIM circuit always needs to be switched on before the servo(s) circuit.

The Trim switch wiring is also shown here. There is a common ground wire and one wire each for pitch up, pitch down, roll up and roll down switches. The wires are labelled accordingly.

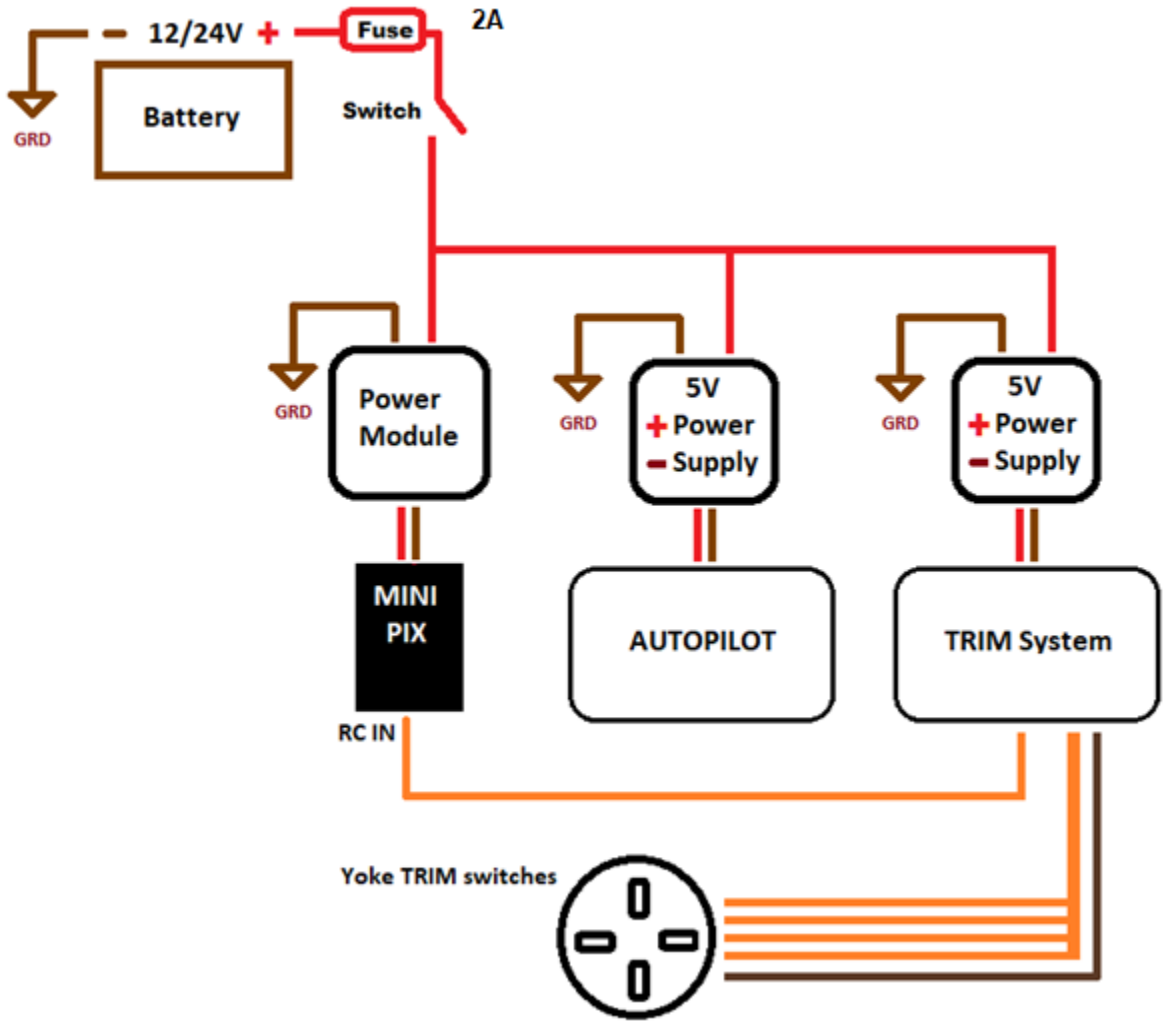

Copyright © 2019 Xflight Technologies LLC, Florida, USA

Note that the trim switches can only connect to GND. Connecting these to a voltage source will damage the trim controller and invalidate the warranty.

Note: Do NOT wire directly to a Ray Allen or other third-party Trim system/harness. The Ray Allen stick grip switches can be used, but you must ensure that the switches just switch the pitch / roll inputs to ground to actuate.

Copyright © 2019 Xflight Technologies LLC, Florida, USA

4. SERVO Considerations

This AUTOPILOT is designed to work for trim tabs (or secondary control surfaces) that are relatively small in area, sufficient to control surfaces for Experimental LSA class aircraft or Ultralights.
The PWM servos (high torque) will need to be selected such that they have adequate torque to move these control surfaces in flight against the expected air flow loads.

As previously stated, the power to the servos needs to be on a separate circuit than the AUTOPILOT, with their own switch and fuse. Servo power supplies or regulators should be physically close to the servo in order to ensure minimal voltage drop.

It is recommended that each individual servo power connection be separately fused. This will also assist in easy enabling and disabling of individual servos when it comes to flight testing.

Servo Wiring:

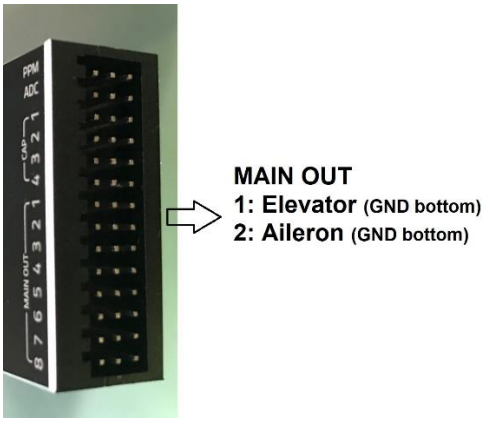

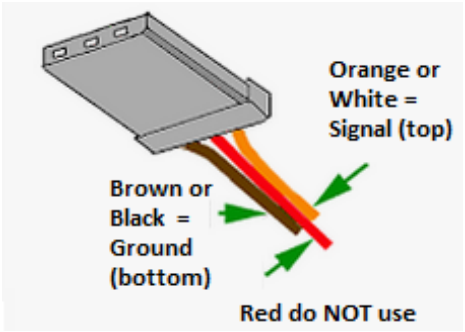

Flight Controller ESC Output 1	Elevator Signal	Orange/White Signal on Top Red (power, middle) do NOT use (cut wire) Brown/Black Ground on Bottom
Flight Controller ESC Output 2	Aileron Signal	Orange/White Signal on Top Red (power, middle) do NOT use (cut wire) Brown/Black Ground on Bottom

The servos use a separate fused power circuit, so the red servo power wire from the Pixhawk 4 Flight Controller needs to be cut. Depending on whether you are using an external servo power supply, or the Xflight Technologies Servo Regulator with or without the Differential Drivers, the servos need to be connected as per the options shown below:

Copyright © 2019 Xflight Technologies LLC, Florida, USA

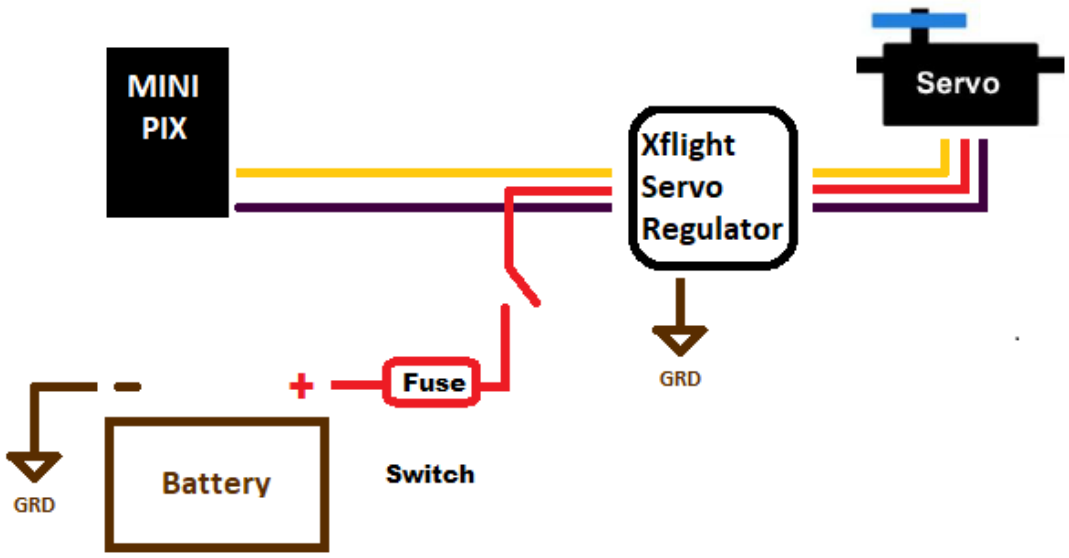

Option 1: Xflight Servo Voltage Regulator

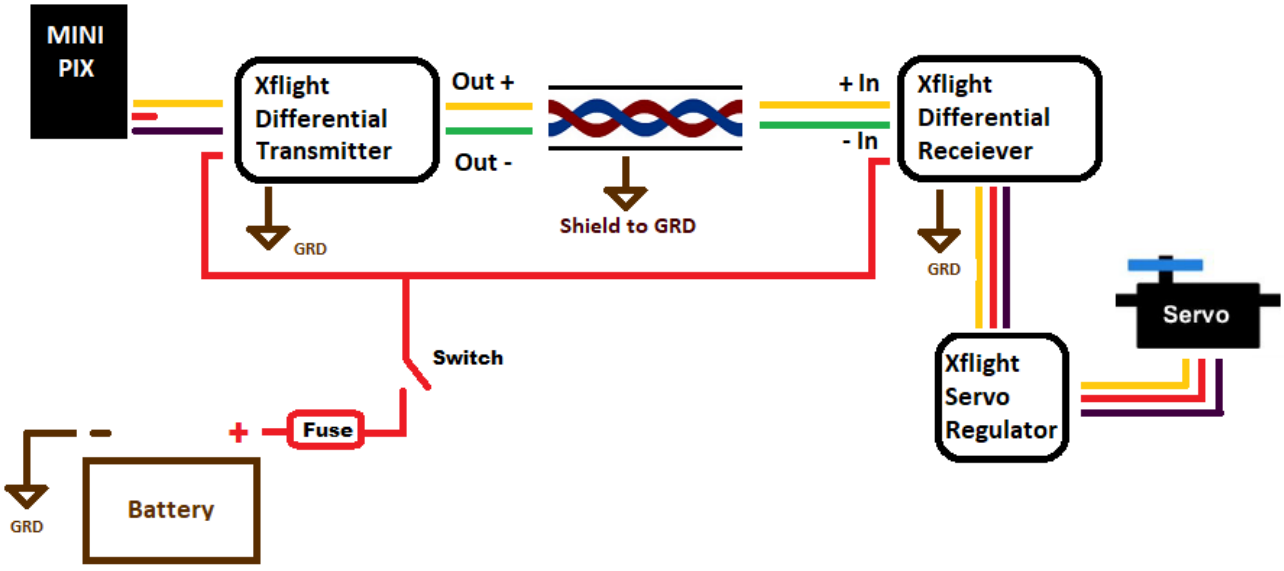

Option 2: Xflight Servo Voltage Regulator with Differential Drivers

Copyright © 2019 Xflight Technologies LLC, Florida, USA

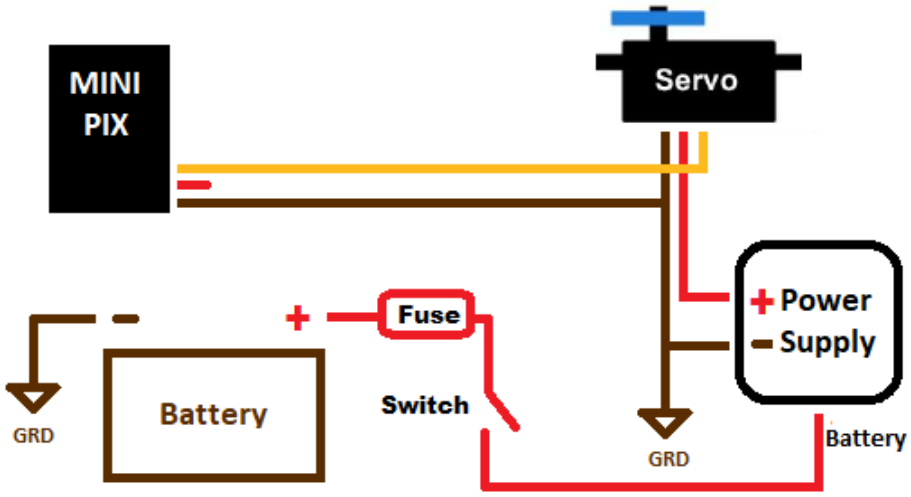

Option 3: External Servo Power Supply

Have a separate fuse for each servo. This will also facilitate disabling one or the other when performing calibration tests for pitch and roll separately.

If you are planning to have more than one servo per axis, e.g. for differential aileron movement, then a Y-cable will need to be used to split the signal to both servos.

It is recommended that shielded cable be used for the servo signal wiring (with the shield connected to ground). Differential drivers are strongly recommended for cable runs greater than 10 feet (available from xflighttech.com).

Copyright © 2019 Xflight Technologies LLC, Florida, USA

Overall Layout

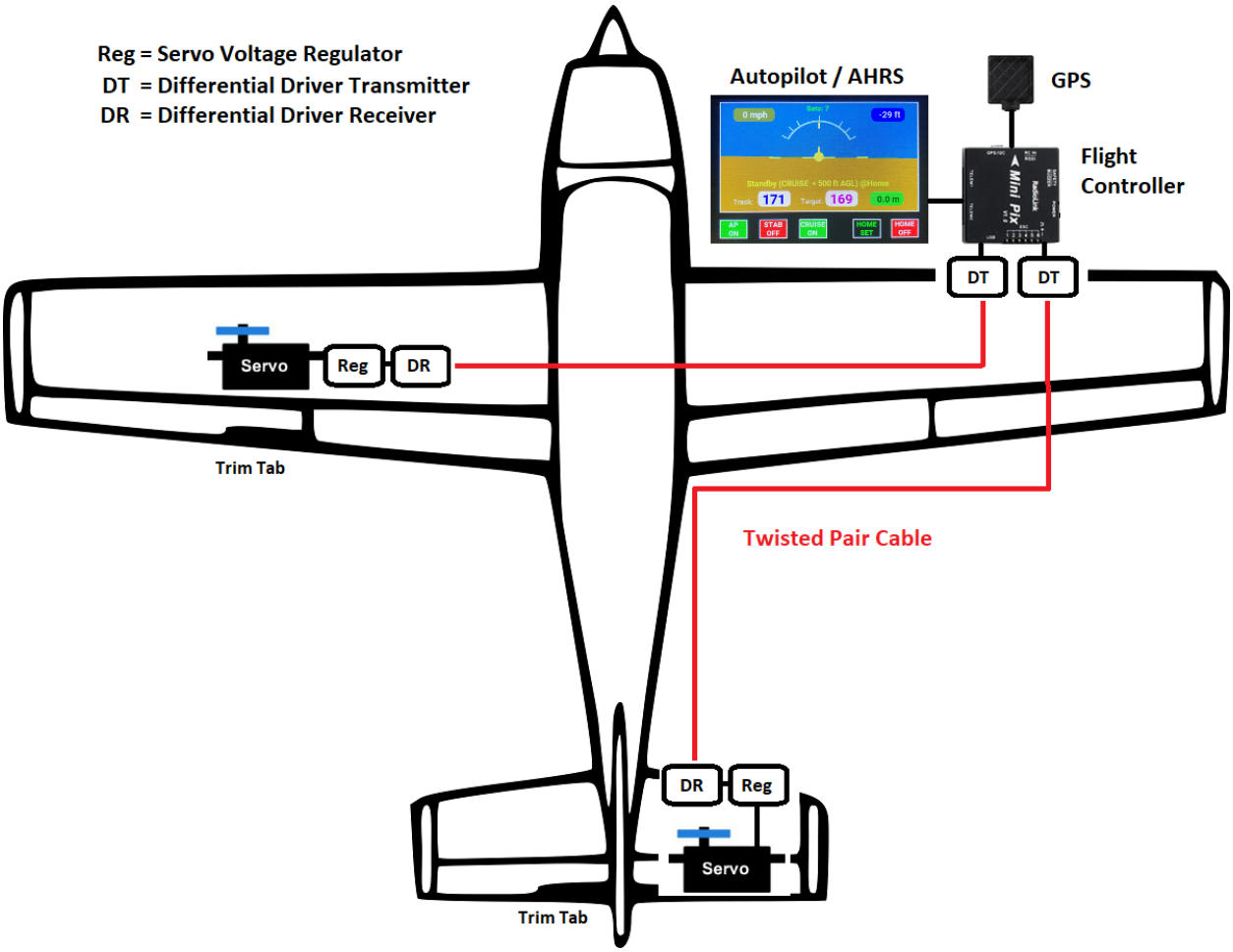

Recommended cable:

Signal: **Belden 8451 shielded 22 AWG or similar**

Power: **20 AWG to 22 AWG Electrical cable**

Copyright © 2019 Xflight Technologies LLC, Florida, USA

G. AHRS / COMPASS Calibration

Basic calibration for straight and level is achieved by touching the central reference plane and waiting a few seconds (this only works on the ground when not moving in AP OFF mode)

For tailwheel aircraft make sure that the tail is lifted up, so the aircraft is straight and level to the horizon, as it would be flying.

Full calibration, if needed, and parameter modification can be done by connecting to the Flight Controller (Pixhawk 4) with Mission Planner either wirelessly or by connecting to USB

1. The AUTOPILOT uses the Pixhawk 4 as its Flight Controller, running opensource ArduPlane software.
   Configurations are made using the ArduPilot Mission Planner application available as a free download from here: http://firmware.ardupilot.org/Tools/MissionPlanner/MissionPlanner-latest.msi

2. Note that you must have the Microsoft .NET framework already installed, this is usually installed by default on the latest Windows OS. It can be downloaded here: https://dotnet.microsoft.com/download/dotnet-framework/net462

3. Mission Planner installation:
   Once you have downloaded the Mission Planner software, double click the executable or **.msi** file, and install on your PC. Allow the device driver to be installed by your operating system.

4. Connect to the Flight Controller either by Wi-Fi or USB:

   a. Wi-Fi Option:
      i. Connect your PC or Laptop to the Flight Controller Wi-Fi module, by accessing your device's Wi-Fi settings, select:
      SSID: **PixRacer**
      Password: **pixracer**
      ii. Start Mission Planner, this will then connect to the Flight Controller automatically

   b. USB Option:
      i. Start the Mission Planner application. Remove the USB cable connecting the AUTOPILOT to the Flight Controller and connect the PC running Mission Planner to the Flight Controller.

      ii. You will now need to see which COM port your PC is using for Mission Planner. The COM port should appear in the Mission Planner **<CONNECT>** drop-down box or you can go into your PC settings/device manager and look for the STMicroelectronics device. E.g. STMicroeletronics Virtual COM port (COM4)

Copyright © 2019 Xflight Technologies LLC, Florida, USA

iii. The top right corner of the Mission Planner will show a **<CONNECT>** button. First select the COM port previously identified from the drop-down box, specify 115200 baud rate and hit **<CONNECT>.** Once connected it will download the Flight Controller parameters and the connection icon will turn green.

c. Once connected the Flight Controller parameters will be read, and available to view/modify (the first time connecting will take longer as all the parameters are downloaded).

Copyright © 2019 Xflight Technologies LLC, Florida, USA

AHRS Calibration

For tailwheel aircraft make sure that the tail is lifted up, so the aircraft is straight and level to the horizon, as it would be flying.

When on the ground touching the center yellow reference plane will calibrate the AHRS to straight & level (AP OFF mode).

This can also be done from the Mission Planner. Make sure the aircraft is straight and level.

Use the top left navigation buttons and select **<INITIAL SETUP>** and select **<Accel Calibration>.** Hit the **<Calibrate Level>** button. This will automatically update the **AHRS_TRIM_X** and **AHRS_TRIM_Y** parameters for you. Navigate to **<FLIGHT DATA>** and you should see a properly leveled AHRS display.

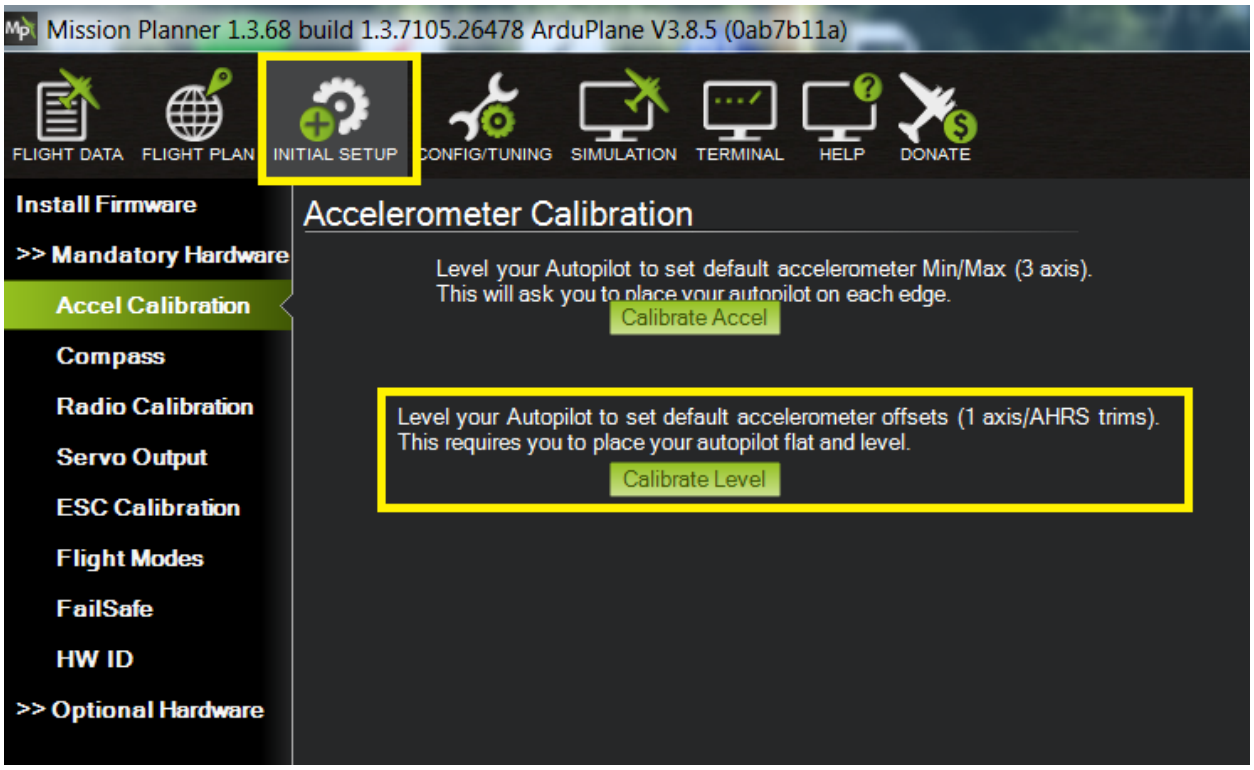

These parameters can also be edited directly:
Use the top left navigation buttons and select **<CONFIG/TUNING>** to view the parameters. Then use the left option list to select **<Full Parameter Tree>.** Under the AHRS section you will find the **AHRS_TRIM** parameters (see screenshot). These fine tune the AHRS to straight and level (as the Flight Controller may not be installed perfectly flat). Once you make a change be sure to click the **<Write Params>** button on the right to save the changes to the Flight Controller. The Mission Planner AHRS display under **<Flight Data>** will update in real-time as these parameters are written. Make sure this appears straight and level, with the red reference plane at the horizon. It is also advisable to take a backup copy of all parameters with **<Save to file>**. It is

Copyright © 2019 Xflight Technologies LLC, Florida, USA

important to ensure the AHRS is straight and level when the aircraft is trimmed and flying straight and level.

For tailwheel aircraft make sure that the tail is lifted up, so the aircraft is straight and level to the horizon, as it would be flying.

AHRS_TRIM_X	Roll angle tuning in radians* (positive to roll the AHRS reference plane left)
AHRS_TRIM_Y	Pitch angle tuning in radians* (positive to pitch the AHRS reference plane down

**note 0.01 radians is approx. 0.6 degrees.*

If the Flight Controller needs to be installed in a different orientation than flat and pointing straight ahead, this can be accommodated by appropriately setting the **AHRS_ORIENTATION** parameter.

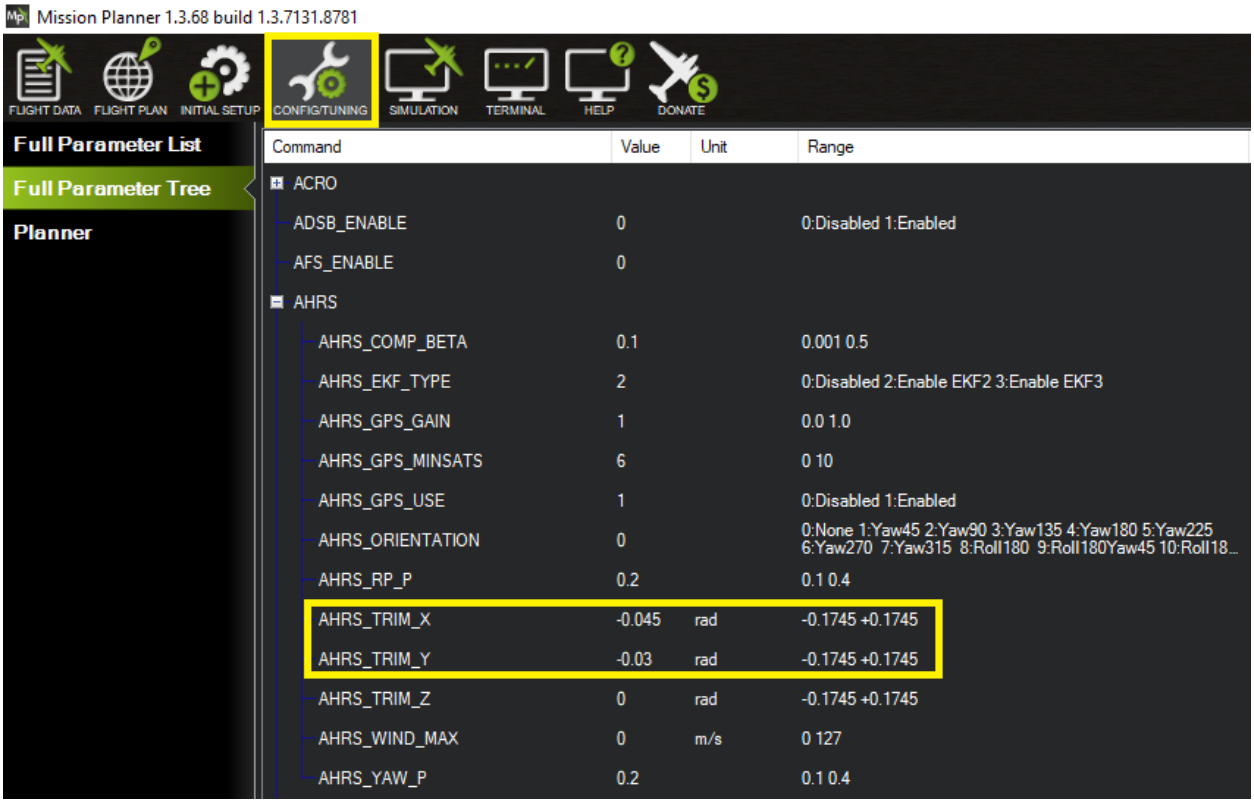

Copyright © 2019 Xflight Technologies LLC, Florida, USA

Compass / Accelerometer Calibration

Compasses

The Compasses have been calibrated, however fine adjustments can be made manually in order to ensure the direction is properly indicated in your aircraft, depending on proximity of metal in the airframe and other effects. The full automated calibration process will also be explained.

The AHRS uses 2 compasses and the GPS. Compass #1 is inside the externally mounted GPS antenna, and Compass #2 is inside the Flight Controller.

Under the COMPASS section you will find the **COMPASS_OFS** parameters (see screenshot). These can be manually modified to fine tune the compass heading. Once you make a change be sure to click the **<Write Params>** button on the right to save the changes to the Flight Controller. The Mission Planner heading display under **<Flight Data>** will update in real-time as these parameters are written. It is also advisable to take a backup copy of all parameters with **<Save to file>**.

COMPASS_OFS_X	Offset for Compass 1 in X direction in mGauss
COMPASS_OFS_Y	Offset for Compass 1 in Y direction in mGauss
COMPASS_OFS_Z	Offset for Compass 1 in Z direction in mGauss
COMPASS_OFS2_X	Offset for Compass 2 in X direction in mGauss
COMPASS_OFS2_Y	Offset for Compass 2 in Y direction in mGauss
COMPASS_OFS2_Z	Offset for Compass 2 in Z direction in mGauss

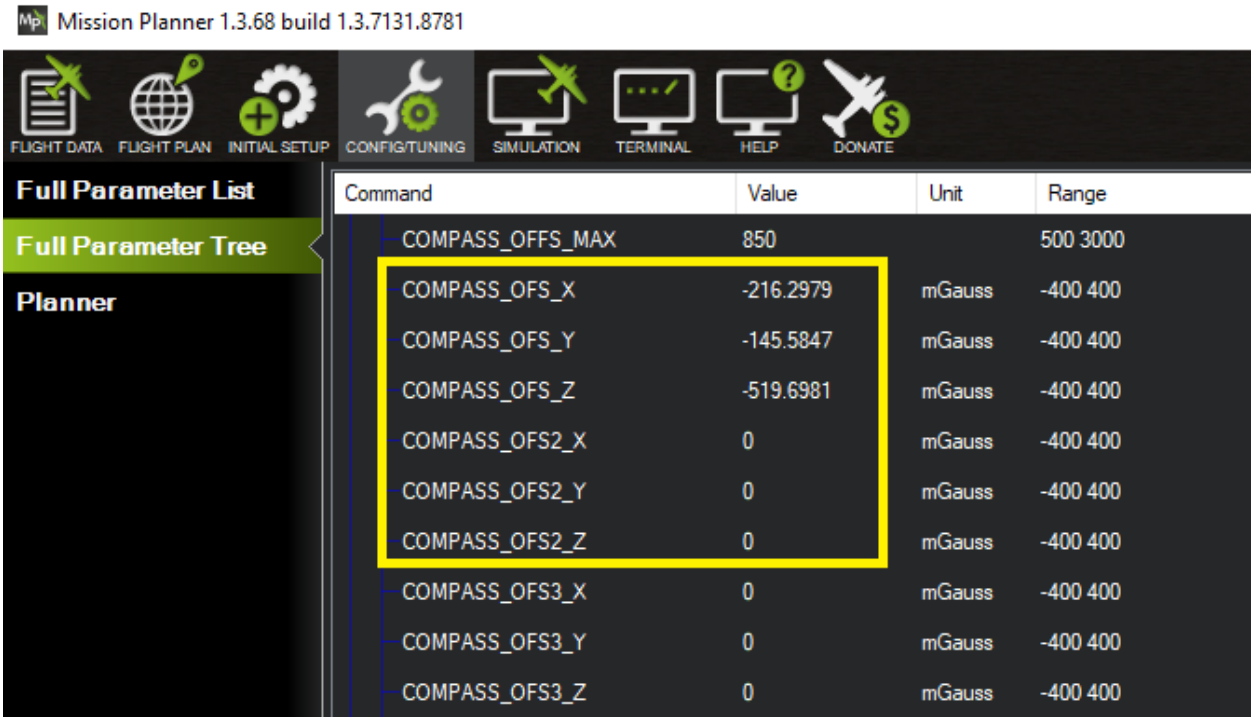

Copyright © 2019 Xflight Technologies LLC, Florida, USA

Compasses can also be enabled / disabled in the parameters:

COMPASS_USE	1	0:Disabled 1:Enabled	Enable or disable the use of the compass (instead of the GPS) for determining heading
COMPASS_USE2	1	0:Disabled 1:Enabled	Enable or disable the second compass for determining heading.
COMPASS_USE3	0	0:Disabled 1:Enabled	Enable or disable the third compass for determining heading.

You can perform the full compass and accelerometer calibration process prior to installation if desired, by selecting **<INITIAL SETUP>** from the navigation buttons, then follow the setup wizard prompts under **>> Mandatory Hardware**.

Select **<Compass>,** then for a simple calibration select **<Pixhawk/PX4>** and follow the prompts. Ensure the GPS antenna and Flight Controller are taped together when performing this and oriented in the same direction (the GPS antenna has a built-in compass).

For a more comprehensive calibration select **<Live Calibration>**, and follow the prompts, moving the flight controller / external compass around as directed.

Copyright © 2019 Xflight Technologies LLC, Florida, USA

Live Calibration:

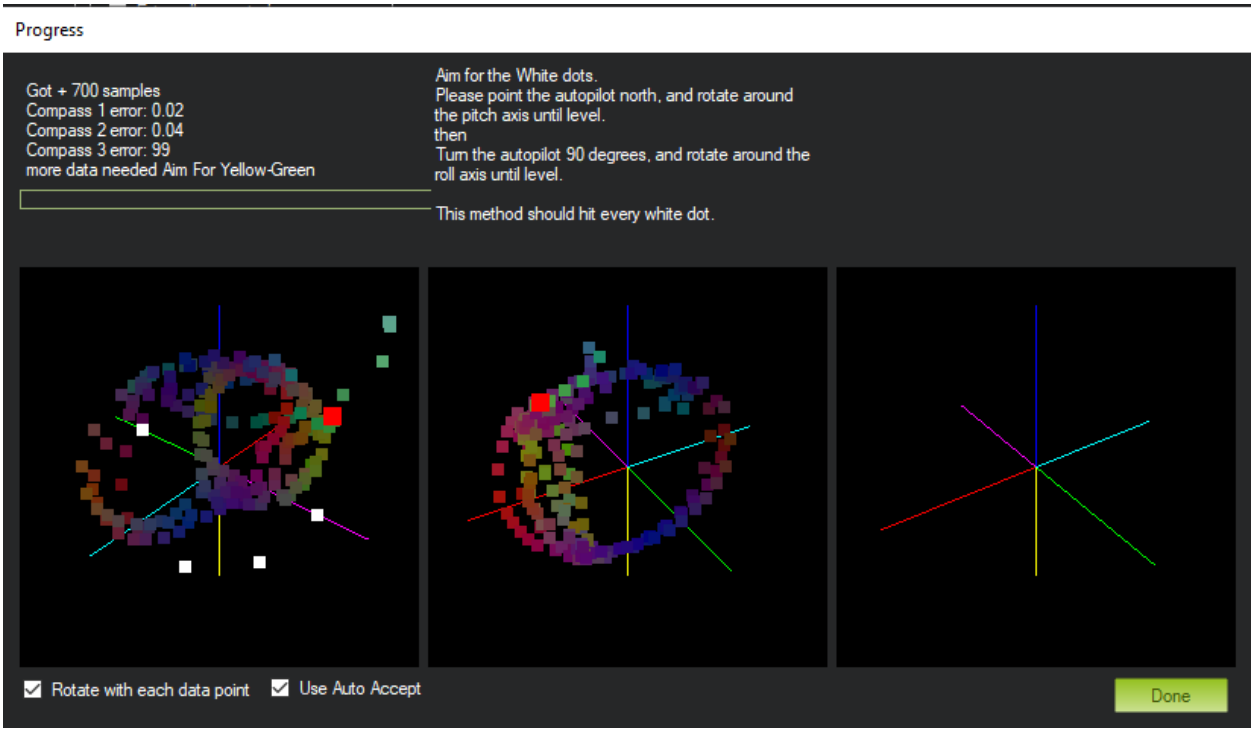

Move the flight controller / GPS antenna as directed: Point North, and rotate around pitch axis until level, then turn 90 degrees and rotate around the roll axis until level, hitting every white dot.

Copyright © 2019 Xflight Technologies LLC, Florida, USA

Accelerometers

Select **<Accel Calibration>**, select the two calibration options and follow the prompts.

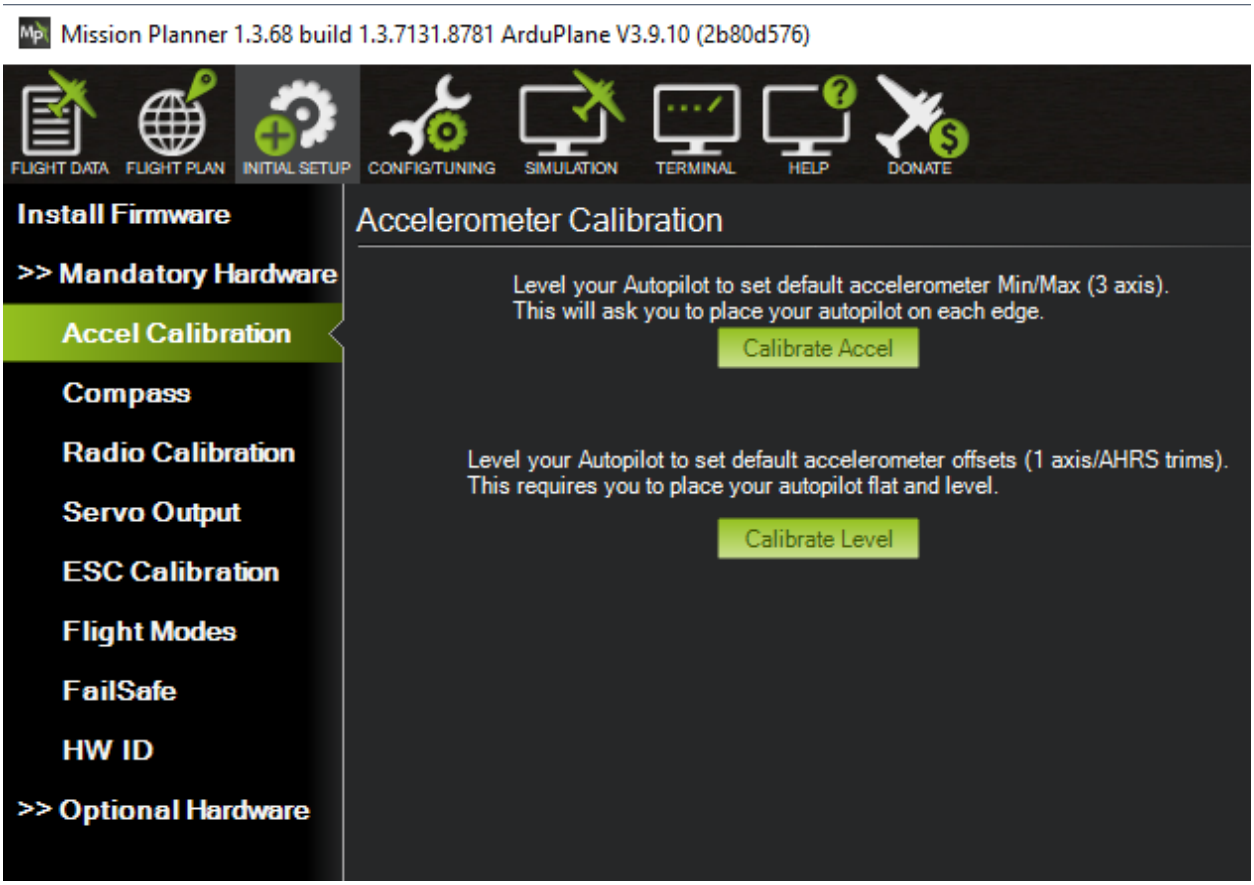

Copyright © 2019 Xflight Technologies LLC, Florida, USA

H. SERVO Setup

It is important to ensure the servos are correctly orientated and ranges set.

The Flight Controller has been pre-configured to the following servo mappings:

Function	Parameter	Value	Servo (Output Channel)
Elevator (Pitch)	SERVO1	19 (Elevator)	1
Aileron (Roll)	SERVO2	4 (Aileron)	2

PWM (Pulse Width Modulation) servos act over a range of pulse width values typically ranging from 1000 µs to 2000 µs. These values define the min and max movement of the servo and hence the control surface, typically over 90 degrees of servo movement. The following parameters can be adjusted to limit min and max ranges (i.e. end points) as well as normal/reverse direction of movement:

These setting can be found under **SERVO1** and **SERVO2**:

SERVO1_FUNCTION	19	Function (**19 = Elevator**)
SERVO1_MAX	1900	Maximum deflection
SERVO1_MIN	1100	Minimum deflection
SERVO1_REVERSED	0	Direction of movement (**0 = Normal, 1 = Reversed**)
SERVO1_TRIM	1500	Mid value (Trim)

SERVO2_FUNCTION	4	Function (**4 = Aileron**)
SERVO2_MAX	1900	Maximum deflection
SERVO2_MIN	1100	Minimum deflection
SERVO2_REVERSED	0	Direction of movement (**0 = Normal, 1 = Reversed**)
SERVO2_TRIM	1500	Mid value (Trim)

Note that by default Servo Auto Trim is enabled. When the aircraft is close to level in a stabilized flight mode, the servo trim is saved every 10 seconds, and persists between flights. This ensures that when manual flight is selected, there should be no difference in trim. This can be disabled / enabled under **SERVO** settings:

SERVO_AUTO_TRIM	1	Servo Auto Trim **(1 = Enabled, 0 = Disabled)**

Copyright © 2019 Xflight Technologies LLC, Florida, USA

Servo Installation Tips:

- The control surface should be neutrally balanced following servo installation. For example, an elevator spring could be used to hold the elevator at the neutral position

- When installing servos, or installing / modifying trim tabs, consideration should be given to the possibility of inducing flutter. Depending on the specific configuration and servo/trim tab weight distribution the critical flutter speed may be affected. Always consult with the original designer or kit manufacturer, or aeronautical engineer before making changes to your aircraft.

- Install servos such that they do not interfere with primary control surface operation. Even if servos get stuck fully extended, you should still have full manual control of the aircraft

- Make sure the secondary / trim flight control surfaces move smoothly from max up to max down deflection across a good portion of the servo full range rotation. I.e. do not have them be so sensitive that the servo only moves through a small rotation for full deflection or moves through a large rotation for a very small deflection

- Make sure there is no possibility of the servos being driven beyond the control surface hard stops. You can define end points in the parameters above.

- Ensure the servo torque rating is sufficient for the loads required. (There are resources on-line to assist with this calculation).

- Ensure you provide a regulated power source for the servos as specified by the manufacturer for maximum torque

- If your servos jitter and are constantly moving to remain stationary when in use, you may have to upgrade to larger servos, or check your **P I D** values (see sections J and K below). Continuous servo jitter will cause them to get very hot, and possibly fail

- It is strongly recommended to use shielded cable (shield connected to ground) for all servo wires, and to use differential drivers for cable runs greater than 10 feet

- Avoid switching the servo circuit on when on the ground, during take-off and landing, when flying at low level, and when the AUTOPILOT is not powered up (the AUTOPILOT circuit should always be powered up first), as the servo signal wires may be susceptible to noise pickup

Copyright © 2019 Xflight Technologies LLC, Florida, USA

The following sections will check for correct servo orientation and calibration

The first step is to ensure the aircraft flies straight and level (additional or existing static trim tabs may also be used to achieve this) with the servo control surfaces / trim tabs in a neutral position with the servos at their mid-range values (1500).

Ensure that calibration in section G has been completed.

It is recommended that you calibrate the TRIM System first and then the AUTOPILOT one axis at a time, and make sure to keep a copy of the default parameter file before you begin (as described in Section G).

Copyright © 2019 Xflight Technologies LLC, Florida, USA

I. PITCH and ROLL Servo Orientation (on the ground)

With the AUTOPILOT installed and AHRS/Compass calibration complete for straight and level and the elevator trim tab and servo installed with the aircraft flying straight and level, you will now be able to set up the pitch and roll servo orientation.

Ensure the correct direction of movement:

1. With the aircraft on the ground in a straight and level configuration, as it would be in flight and able to receive satellite signal, switch on the AUTOPILOT. Wait a few seconds for the Flight Controller to initialize, and the AUTOPILOT to start up and display the AHRS screen.

2. Now switch on the servo circuit to power up the pitch and roll servos. Ensure the elevator trim tab and aileron trim tab (or secondary ailerons) are at their correct neutral trim positions and the servo endpoints have been set up correctly.

3. Ensure the AHRS is level, then select the **<AP>** button (first touchscreen button from the left) to switch the AUTOPILOT into Manual flight mode. You should see **<AP ON>** in green.

4. Press the Servo Test Switch. This will slowly move the pitch and roll servos from their neutral position to one of their endpoints as defined by **SERVO1_MAX** and **SERVO2_MAX** and back again. (As a safety precaution this switch only works when the groundspeed is less than 20mph).

You should see the control surfaces move in the following directions:

PITCH:

Control Surface	**Expected Movement**
Elevator Trim Tab	Trim Tab Down (Elevator UP) to **pitch aircraft UP**

If this is reversed, then you will need to change the **SERVO1 _REVERSED** parameter discussed above: **SERVO1_REVERSED** = **0** (Normal) or **SERVO1_REVERSED** = **1** (Reversed) and re-test.

ROLL:

Control Surface	**Expected Movement**
Port Secondary Aileron	UP to **roll aircraft to the LEFT**
Starboard Secondary Aileron	Down to **roll aircraft to the LEFT**

OR

Port Aileron Trim Tab	Trim Tab Down (Aileron UP) to **roll aircraft to the LEFT**
Starboard Aileron Trim Tab	Trim Tab UP (Aileron Down) to **roll aircraft to the LEFT**

If this is reversed, then you will need to change the **SERVO2 _REVERSED** parameter discussed above: **SERVO2_REVERSED** = **0** (Normal) or **SERVO2_REVERSED** = **1** (Reversed) and re-test.

5. The AUTOPILOT and servo can now be switched off.

Copyright © 2019 Xflight Technologies LLC, Florida, USA

J. TRIM System Servo Orientation (on the ground)

With the AUTOPILOT installed and AHRS/Compass calibration complete for straight and level and the elevator trim tab and servo installed with the aircraft flying straight and level, you will now be able to test the TRIM system / servo orientations.

Ensure the correct trim servo movements:

1. With the aircraft on the ground in a straight and level configuration, as it would be in flight and able to receive satellite signal, switch on the AUTOPILOT. Wait a few seconds for the Flight Controller to initialize, and the AUTOPILOT to start up and display the AHRS screen.

2. Now switch on the servo circuit to power up the pitch and roll servos. Ensure the elevator trim tab and roll trim tab or secondary aileron control surfaces are at their correct neutral trim positions.

3. Ensure the AHRS is level, then select the **<AP>** button (first touchscreen button from the left) to switch the AUTOPILOT into Manual flight mode to enable the TRIM System. You should see **<AP ON>** in green.

4. Press the pitch up trim switch a few times or press continuously and make sure the elevator trim tab moves in the correct direction. For a trim tab on a moveable elevator control surface, this would be a downward movement of the trim tab (allowing the airflow against the trim tab to push the elevator up). Repeat for pitch down.

Action	Control Surface	Expected Movement
Yoke switch: pitch up	Elevator Trim Tab	Trim Tab Down (Elevator up)
Yoke switch: pitch down	Elevator Trim Tab	Trim Tab Up (Elevator down)

If this is reversed, then you will need to swap over the trim switch wires for pitch up and pitch down.

5. Press the pitch up and pitch down switches simultaneously; the elevator trim tab should move back to the neutral position.

6. Repeat the process for roll. Press the roll left trim switch a few times or press continuously and make sure the secondary aileron or trim tab moves in the correct direction as per below.

Action	Control Surface	Expected Movement
Yoke switch: roll left	Port Secondary Aileron	Up
Yoke switch: roll left	Starboard Secondary Aileron	Down

OR

Yoke switch: roll left	Port Aileron Trim Tab	Trim Tab Down (Aileron up)
Yoke switch: roll left	Starboard Aileron Trim Tab	Trim Tab Up (Aileron Down)

Repeat for roll right.

If this is reversed, then you will need to swap over the trim switch wires for roll left and roll right.

Copyright © 2019 Xflight Technologies LLC, Florida, USA

K. ROLL Axis Gain Calibration (in flight)

This step will calibrate the roll axis only to ensure the gain is set correctly to allow for a smooth correction to roll and heading in flight. Pick a clear area on a good weather day with very little wind for this test and fly at a safe altitude away from populated areas.

Ensure the correct direction of movement:

Make sure the pitch servo power is disconnected or switched off prior to starting, this test is only for roll. This will likely take a few flights to fine tune. **Make sure to do clearing turns before any maneuver to ensure there is no other traffic in the area.**

1. Prior to takeoff power up the AUTOPILOT. This will display the AHRS and set the Home location. **Leave the servo(s) circuit powered down**.

2. Takeoff and fly straight and level at a typical cruise speed at a safe altitude. The AHRS display should be straight and level.

3. Select **AP ON**. This will enable the Servo PWM signals and start flight logging. Power up the roll servo(s). **Immediately switch the AUTOPILOT off (AP OFF) or power down the roll servo(s) if you experience any adverse reaction.**

4. Wait a second or two, then select **STAB ON** to enter wings stabilization mode.

5. The current heading should not change much. **Immediately switch the AUTOPILOT off (AP OFF) or power down the roll servo(s) if you experience any adverse reaction.**

6. Put in a rapid bank angle for a couple of seconds and then release the yoke. Do the same in the opposite direction. You want the plane to roll out smoothly and gently, with wings level on the new heading (note this mode does not track a heading). **Immediately switch the AUTOPILOT off (AP OFF) or power down the roll servo(s) if you experience any adverse reaction.**

7. Next, from straight and level with the roll servo(s) powered up and the AUTOPILOT on (**AP ON**), select **CRUISE ON** (Cruise mode). The AUTOPILOT should now display a **Target** heading (this is the heading it locked in as the current heading to follow. The **Track** is your actual heading and should remain within a few degrees of the **Target** heading, depending on wind. **Immediately switch the AUTOPILOT off (AP OFF) or power down the roll servo(s) if you experience any adverse reaction.**

8. Again, put in a bank angle for a couple of seconds and then release the yoke. Do the same in the opposite direction. You want the plane to roll back smoothly and gently to re-acquire the **Target** heading (note if its windy the aircraft will crab into the wind, to maintain the GPS target). The maximum bank angle has been configured for **20** degrees. **Immediately switch the AUTOPILOT off (AP OFF) or power down the roll servo(s) if you experience any adverse reaction.**

Copyright © 2019 Xflight Technologies LLC, Florida, USA

9. When complete allow servos to return to a neutral position, then switch the AUTOPILOT off (**AP OFF**) and/or power down the roll servo(s).

10. If the roll response is too slow then you will need to increase **RLL2SRV_P** and **RLL2SRV_FF** when back on the ground in small increments around 0.5 until you are happy with the response (alternatively, an in-flight tuning kit is available to modify parameters in flight). **These are the most important roll tuning parameters and must be tuned first.**

RLL2SRV	RLL2SRV_P	Roll Proportional gain (default = **3**)
RLL2SRV	RLL2SRV_FF	Roll Feed Forward gain (default = **4**)

    If you get bank angle oscillation or overshoot, then you will need to reduce **RLL2SRV_P** when back on the ground in increments of 0.1.

11. You can also adjust the **RLL2SRV_I** response in steps of 0.1 to allow the aircraft to cope better with wind.

12. If you see unexpected rapid servo movement then your PID gains may be too high; this may cause the servos to overheat.

13. If you are not able to achieve smooth roll reactions, then recheck AHRS level configurations and/or roll axis orientation. A more detailed explanation can be found here: http://ardupilot.org/plane/docs/roll-pitch-controller-tuning.html
    If all else fails, then contact steve@xflighttech.com for support.

Copyright © 2019 Xflight Technologies LLC, Florida, USA

L. PITCH Axis Gain Calibration (in flight)

This step will calibrate the pitch axis only to ensure the gain is set correctly to allow for a smooth correction to pitch and altitude in flight. Pick a clear area on a good weather day with very little wind for this test and fly at a safe altitude away from populated areas.

Make sure the roll servo power is disconnected or switched off prior to starting, this test is only for pitch. This will likely take a few flights to fine tune. **Make sure to do clearing turns before any maneuver to ensure there is no other traffic in the area.**

1. Prior to takeoff power up the AUTOPILOT. This will display the AHRS and set the Home location. **Leave the servo(s) circuit powered down**.

2. Takeoff and fly straight and level at a typical cruise speed at a safe altitude. The AHRS display should be straight and level.

3. Select **AP ON**. This will enable the Servo PWM signals and start flight logging. Power up the pitch servo. **Immediately switch the AUTOPILOT off (AP OFF) or power down the pitch servo if you experience any adverse reaction.**

4. Wait a second or two, then select **CRUISE ON** to enter Cruise mode. Note the altitude.

5. The current altitude should not change much. **Immediately switch the AUTOPILOT off (AP OFF) or power down the pitch servo if you experience any adverse reaction.**

6. Put in a gentle pitch angle for a couple of seconds to change altitude and then release the yoke. Do the same in the opposite direction. You want the plane to pitch back smoothly and gently to the original altitude. **Immediately switch the AUTOPILOT off (AP OFF) or power down the pitch servo if you experience any adverse reaction.**

7. When complete allow the servo to return to a neutral position, then switch the AUTOPILOT off (**AP OFF**) and/or power down the pitch servo.

8. If the pitch response is too slow then you will need to increase **PTCH2SRV_P** and **PTCH2SRV_FF** when back on the ground in increments of 0.5 until you are happy with the response (alternatively, an in-flight tuning kit is available to modify parameters in flight). **These are the most important pitch tuning parameters and must be tuned first**.

PTCH2SRV	PTCH2SRV_P	Pitch Proportional gain (default = **3**)
PTCH2SRV	PTCH2SRV_FF	Pitch Feed Forward gain (default = **6**)

9. You can also adjust the **PTCH2SRV_I** response in steps of 0.1.

Copyright © 2019 Xflight Technologies LLC, Florida, USA

10. If you see unexpected rapid servo movement then your PID gains may be too high; this may cause the servos to overheat.

11. The **PTCH2SRV_RLL** parameter is used to keep the nose level during turns.
    If the aircraft gains height during turns then you need to reduce **PTCH2SRV_RLL** by small increments of 0.05. If the aircraft immediately descends during turns, then increase the **PTCH2SRV_RLL** by small increments of 0.01.

12. If you are not able to achieve smooth pitch reactions, then recheck AHRS level configurations and/or pitch axis orientation. A more detailed explanation can be found here:
    http://ardupilot.org/plane/docs/roll-pitch-controller-tuning.html
    If all else fails, then contact steve@xflighttech.com for support.

In Summary

This table shows an overall general summary of the effect of **raising PID** gain values:

PID / FF Parameter (increasing)	Time to Target	Overshoot	Settling Time	Steady-State Error	Stability
FF	Decrease	Increase	Small Increase	Decrease	Degrade
P	Decrease	Increase	Small Increase	Decrease	Degrade
I	Small Decrease	Increase	Increase	Large Decrease	Degrade
D	Small Decrease	Decrease	Decrease	Minor Change	Improve

Copyright © 2019 Xflight Technologies LLC, Florida, USA

M. CRUISE and HOME Flight Tests

The final flight test will be to test pitch and roll together as well as return to HOME location.

Again, pick a clear area on a good weather day with very little wind for this test and fly at a safe altitude away from populated areas.

Make sure to do clearing turns before any maneuver to ensure there is no other traffic in the area.

1. Prior to takeoff power up the AUTOPILOT. **Leave the pitch and roll servos switched off.**

2. Takeoff and fly straight and level at a typical cruise speed at a safe altitude. The AHRS display should be straight and level.

3. Select **AP ON** and power up the pitch and roll servos.

4. Select **CRUISE ON** to enter Cruise mode.
   The AUTOPILOT should maintain the current heading and altitude. **Immediately switch the AUTOPILOT off (AP OFF) or power down the servo(s) if you experience any adverse reaction.**

5. Fly at least 3 miles away from the airport.

6. Return to Home Test:
   Select **HOME ON** to enter RTL (Return to Land) mode. The AUTOPILOT should now display the Home heading as the **Target** heading (the **Track** is your actual heading) and acquire this heading with a maximum bank angle of **20** degrees while maintaining current altitude. **Immediately switch the AUTOPILOT off (AP OFF) or power down the servos if you experience any adverse reaction.** The maximum bank angle is configurable:

LIM	**LIM_ROLL_CD**	2000	In cdeg (centi-degrees)

7. Once you are within 2 miles of the airport the **HOME** button will start to flash. The aircraft will then enter a 1-mile radius left hand loiter circle above the airport at current altitude until the HOME mode is disengaged, or the AUTOPILOT has been switched off. The loiter circle parameters are configurable. This needs to be set to a value your aircraft can easily achieve (see the following section).

RTL	**RTL_RADIUS**	-1609*	In meters Negative for counter-clockwise Positive for clockwise

**Note 1,609 meters is 1 mile*

8. When complete allow servos to return to a neutral position, then switch the AUTOPILOT off (**AP OFF**) and/or power down the servos.

Copyright © 2019 Xflight Technologies LLC, Florida, USA

N. NAV L1 Controller Tuning

The Arduplane L1 Navigation Controller controls mission turns and loiter circles and involves tuning one key parameter – the **NAVL1_PERIOD** (optionally the **NAVL1_DAMPING** parameter can also be adjusted).

1. Make sure you have already tuned the roll and pitch controllers as per sections above

2. When in a flight mode that executes a turn, e.g. HOME (RTL - Return to Land) mode, where a turn is executed by the AUTOPILOT, either in turning back to the HOME location, or acquiring and remaining within a loiter circle, observe the behavior.

3. When back on the ground make the following adjustments (alternatively, an in-flight tuning kit is available to modify parameters in flight).
   If the aircraft turns too slowly then reduce **NAVL1_PERIOD** by 2 - 5. If it is weaving after a turn, then increase **NAVL1_PERIOD** by 1 or 2

NAVL1	NAVL1_PERIOD	NAV L1 Controller period (seconds) (default = **35**)
NAVL1	NAVL1_DAMPING	NAV L1 Controller damping (default = **0.8**)

   If you want the aircraft to smoothly acquire and maintain the loiter circle, then set **RTL_RADIUS** to a larger number. A good starting value is to set it equal to the turn radius your aircraft can easily achieve.

   The **NAVL1_DAMPING** parameter enables additional damping to be specified to compensate for delays in the velocity measurement and aircraft roll response.

4. In order properly anticipate Waypoint turns, make sure your Waypoint radius parameters are correctly setup, e.g.:

WP -> WP_RADIUS	250	WP radius in meters

Note 1,609 meters = 1 mile

Additional details are available here: http://ardupilot.org/plane/docs/navigation-tuning.html

Copyright © 2019 Xflight Technologies LLC, Florida, USA

O. **NAV Connection and Setup**

The NAV mode allows you to upload missions specified in the Ardupilot QGroundControl App. The mission can be uploaded to the AUTOPILOT when in **NAV WAIT** mode.

1. Download the QGroundControl app and install on your Android or iOS mobile device (this is a free opensource application)

2. Go to your mobile device's Wi-Fi settings and connect to **PixRacer**, with password: pixracer**.** Full configuration parameters:

SSID	PixRacer
PASSWORD	pixracer
CHANNEL	11
ROUTER ADDRESS	192.168.4.1
PORT	14550
TYPE	UDP
Emit heartbeat	OFF
Only accept MAVs with same protocol version	OFF

3. Once connected you will see the app download the flight parameters from the Flight Controller.

   If you have problems connecting, try one of these possible solutions:

   a. Ensure the Wi-Fi module is connected to the **TELEM1** port on the Pixhawk 4 Flight Controller, and that the Flight Controller is powered up

   b. Restart the QGroundControl app (remove from memory and start up again)

   c. Go to your device's Wi-Fi settings and ensure you are connected to PixRacer, then select the **Renew Lease** option

4. QGroundControl App
   - For a detailed explanation of the QGroundControl app please see user guide at: https://docs.qgroundcontrol.com/en/

Copyright © 2019 Xflight Technologies LLC, Florida, USA

P. NAV Mode

1. Power up the AUTOPILOT (Leave the SERVO circuit powered down).

2. Select **AP ON**. This will enable the Servo PWM signals and start flight logging.

3. Wait a second or two, then select **NAV ON** to enter NAV mode. The Button should show **NAV WAIT.** The AUTOPILOT is now waiting for a mission to be uploaded and initiated from the QGroundControl app

4. Once the mission has been uploaded, and initiated from the app, the button will show **NAV ON**, indicating that the AUTOPILOT is now following the mission in AUTO flight mode and will navigate to the first waypoint.

   Note that since the AUTOPILOT does not have control of the throttle, if you have defined waypoints at different altitudes, you will need to manually control power as appropriate to assist the AUTOPILOT in making altitude changes.

   - For an overview of the NAV function see: https://www.youtube.com/watch?v=ZSrYHrVK_7s&t=2s

5. If modifying a mission in flight, it is recommended to drop out of NAV mode, back to manual mode, before re-uploading, and initializing the modified mission, otherwise QGroundControl may enter you into a loiter circle while the mission is being modified.

Copyright © 2019 Xflight Technologies LLC, Florida, USA

Q. LOGFILE Access

Log files are available via the Mission Planner. This will give you access to many different flight parameters as well as the ability to view your flight track on Google Earth.

While connected to the Flight Controller, select **<FLIGHT DATA>** from the navigation buttons, then select **<DataFlash Logs>** from the tabs at the bottom. Select **<Download DataFlash Log Via Mavlink>** (if you get a message requesting to disarm the controller hit **<OK>**). This will bring up a Log Downloader box, where you can download all or individual logs.

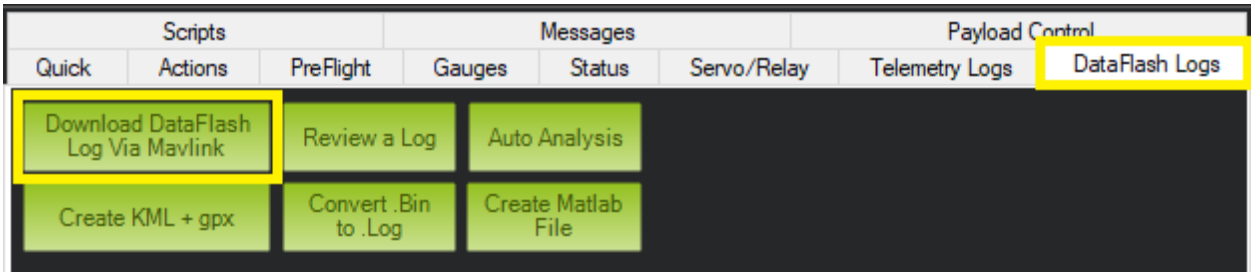

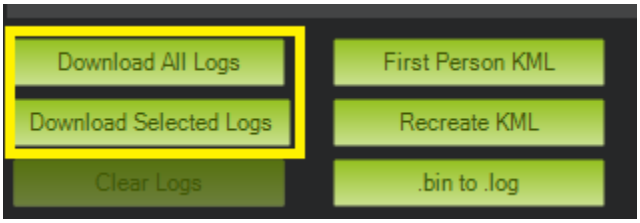

The Logs will be saved in your Mission Planner directory:
(typically - C:\users\<*Your Name*>\Documents\Mission Planner\logs\FIXED_WING\1)

Once loaded you can either review the logs within the Mission Planner graphing function **<Review a Log>** or view the flight path in Google Earth with the **.kmz** and **.gpx** files. These files are automatically created.

To see the flight path in Google Earth, simply drag the files from the Mission Planner directory into Google Earth.

The **.kmz** file will show your flight path and altitude and the **.gpx** file will show your GPS waypoint data in KML format.

You can also create the **.gpx** and **.kmz** files from the **.bin** file manually by selecting <**Create KML + gpx>** from the options:

Copyright © 2019 Xflight Technologies LLC, Florida, USA

Note that you will NOT have the tlogs (telemetry logs)

A more detailed description of the logs and graphing options is available here: http://ardupilot.org/plane/docs/common-downloading-and-analyzing-data-logs-in-mission-planner.html

Tracks and waypoints on QGroundControl App during a NAV mission

Copyright © 2019 Xflight Technologies LLC, Florida, USA

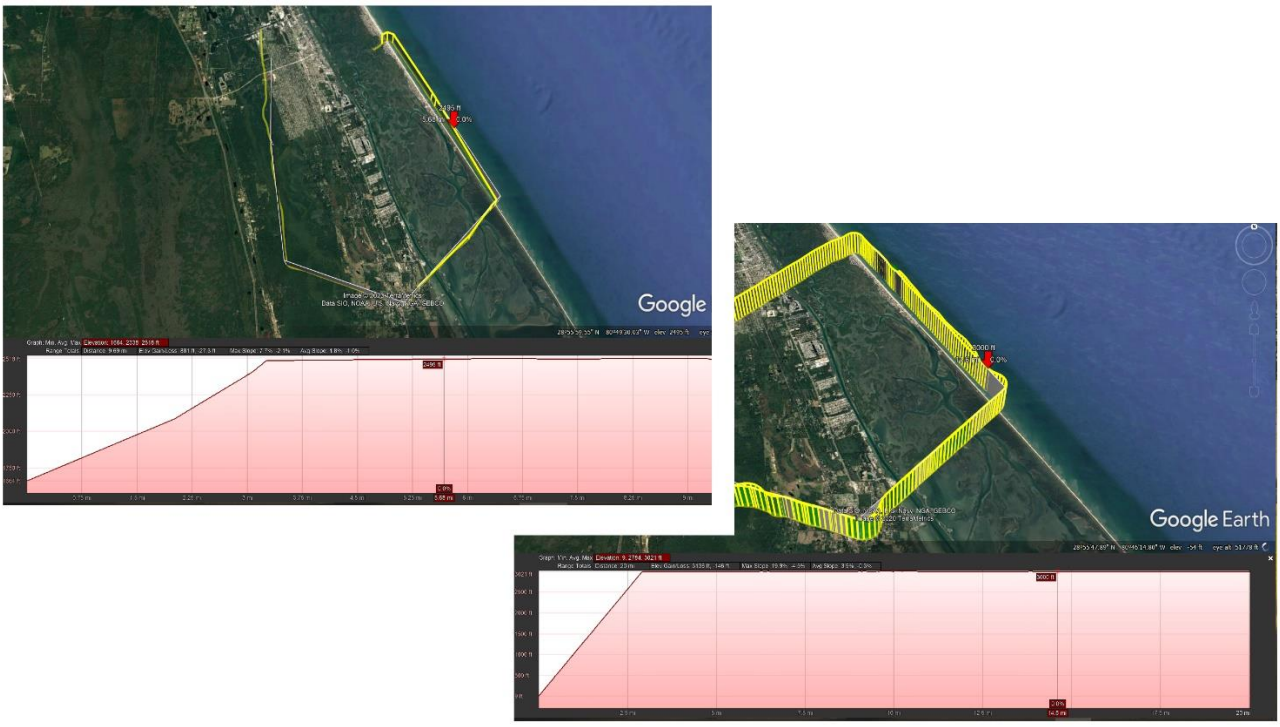

Tracks and Elevation Profiles (speed/altitude) on Google Earth during NAV missions

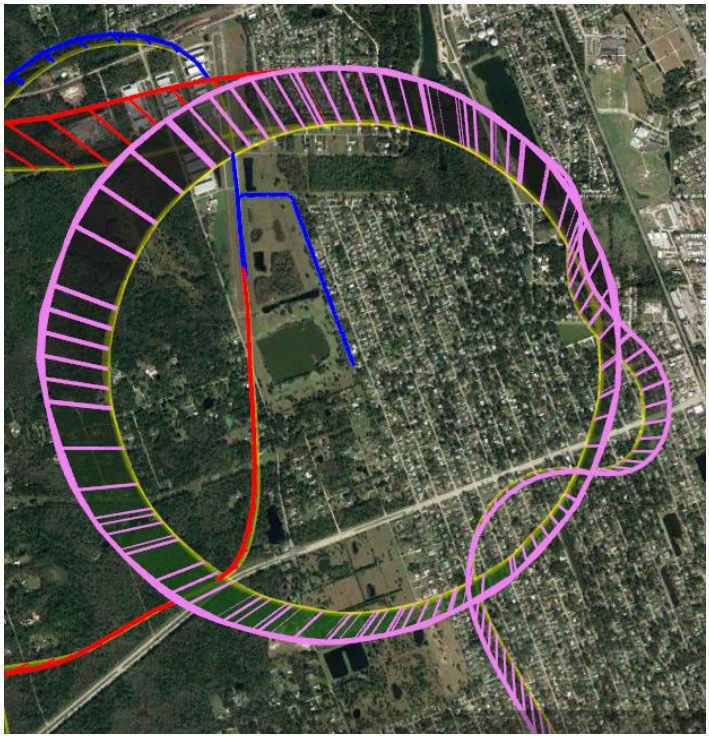

The pink tracks above show the HOME / RTL (Return to Land) tracks and 1-mile radius loiter circles at the HOME location. There are 2 ½ circles here, with the autopilot maintaining very high precision orbits.

Copyright © 2019 Xflight Technologies LLC, Florida, USA

For a full description of all parameters please visit: http://ardupilot.org/plane/docs/parameters.html

But please note this includes all the ArduPlane parameters, which are not all relevant.

Copyright © 2019 Xflight Technologies LLC, Florida, USA

Appendix A.
Xflight Technologies LLC Terms, Conditions and Warranty

1. **PARTIES.** This Contract represents the terms and conditions of sale of Xflight Technologies Products by and between Xflight Technologies LLC, of 1982 State Rd 44, New Smyrna Beach, Florida 32168, USA ("Seller"), and Buyer ("Buyer").

2. **ITEMS PURCHASED**. Seller agrees to sell, and Buyer agrees to buy, one or more of the following products (the "Goods") in accordance with the terms and conditions of this Contract:

Products
Xflight AutoPilot and related sub-components
Xflight AHRS and related sub-components
Xflight Autopilot Tuning Kit
Xflight TRIM controller and related components
Xflight Gyro Controller and related components
Xflight Electronic Solid State Switch
Xflight Pre-Compliance Lightning Pulse Gen.
Xflight Servo Differential Drivers
Xflight Servo Voltage Regulator

3. **FLIGHT CONTROLLER.** Note that the use of the Ardupilot opensource firmware, as used in 3rd party Flight Controllers, in this application is contrary to Ardupilot's Code of Conduct for use in Manned Vehicles, for more info see: **https://firmware.ardupilot.org/**

4. **TRIM & AUTOPILOT COMPONENTS**
   Xflight Autopilot and Manual Trim components are ONLY intended for control of trim tabs or secondary flight control surfaces via high torque PWM servos and must NEVER be used for direct control of primary flight control surfaces.

5. **TRIM TABS**
   Xflight Technologies is not providing any specific advice on trim tab size, location, installation or servo installation and weight distribution, with possible implications for induced flutter. Always consult with the original designer or kit manufacturer or an aeronautical engineer before making changes to your aircraft

6. **INTELLECTUAL PROPERTY.** Intellectual property created, made, or originated by the officers, employees, or contractors of Seller shall remain the sole and exclusive property of Seller. Any intellectual property associated with Goods, specifically the software, shall remain the property of Seller. Seller retains all rights to its pre-existing intellectual

Copyright © 2019 Xflight Technologies LLC, Florida, USA

property and any intellectual property it creates in connection with the development and manufacturing of the Goods of this agreement. Parties agree that Seller will retain ownership of all rights in any invention and work product developed pursuant to the agreement and acknowledges that all materials created by the Seller pursuant to and related to the agreement belong to the Seller under United States intellectual property laws.

7. **WARRANTIES.** The Goods are sold on an "AS IS" basis. SELLER SHALL IN NO EVENT BE LIABLE FOR ANY INCIDENTAL, SPECIAL, OR CONSEQUENTIAL DAMAGES OF ANY NATURE, EVEN IF SELLER HAS BEEN ADVISED OF THE POSSIBILITY OF SUCH DAMAGES. Seller's liability, if any, for defective Goods, is limited to replacement, repair or refund of the defective Goods, at Seller's option for up to 30 days from date of purchase.

8. **PERSONAL USE**. Buyer agrees to limit the operation and use of purchased Goods to personal recreational use. Buyer agrees to not develop or resell Goods, its components, or documentation to another party without Seller's written authorization.

9. **PRODUCT RISKS**. Note that the Xflight Autopilot system utilizes a third-party UAV Flight Controller designed for unmanned aircraft, and its application to experimental aircraft is an experimental application. The performance cannot be expected to be comparable to that of a commercial autopilot system.
   Buyer acknowledges that the ownership and operation of the newly developed autopilot and AHRS products, including the subject Goods contemplated by this contract, comes with many unforeseeable risks and potential hazards. Buyer has reviewed the risks, safety hazards and recommendations provided by Seller in the User Guide. Buyer has considered these risks and represents himself as a consumer with a sophisticated understanding of aircraft operation and mechanics, vehicle physics, flying safety protocols, and the concepts underlying the Goods' design. Buyer accepts all foreseeable and unforeseeable risks associated with the ownership and operation of the Goods, components, and related equipment.

10. **INDEMNIFICATION.** Buyer shall defend, indemnify, and hold harmless Seller, including its officers and agents, from any and all actual or alleged claims, demands, causes of action, liability, loss, damage and/or injury (to property or persons, including without limitation wrongful death), associated with the ownership and operation of the Goods of this contract. This indemnity shall apply in all actions, whether brought by an individual or other entity, or imposed by a court of law or by administrative action of any federal, state, or local governmental body or agency, arising out of or incident to any acts, omissions, negligence, or willful misconduct of Buyer, its personnel, employees, agents, contractors, or volunteers in connection with or arising out of Buyer's actions. This indemnification applies to and includes, without limitation, the payment of all penalties, fines, judgments, awards, decrees, attorneys' fees, and related costs or expenses, and any reimbursements to Seller for all legal expenses and costs incurred by it.

Copyright © 2019 Xflight Technologies LLC, Florida, USA

11. **REMEDIES ON DEFAULT.** In addition to any and all other rights a party may have available according to law, if a party defaults by failing to substantially perform any provision, term or condition of this Contract (including without limitation the failure to make a monetary payment when due), the other party may terminate the Contract by providing written notice to the defaulting party. This notice shall describe with sufficient detail the nature of the default. The party receiving such notice shall have 30 days from the effective date of such notice to cure the default(s). Unless waived by a party providing notice, the failure to cure the default(s) within such time period shall result in the automatic termination of this Contract.

12. **ARBITRATION**. Any controversies or disputes arising out of or relating to this Contract shall be resolved by binding arbitration in accordance with the then-current Commercial Arbitration Rules of the American Arbitration Association. The parties shall select a mutually acceptable arbitrator knowledgeable about issues relating to the subject matter of this Contract. In the event the parties are unable to agree to such a selection, each party will select an arbitrator and the two arbitrators in turn shall select a third arbitrator, all three of whom shall preside jointly over the matter. The arbitration shall take place at a location that is reasonably centrally located between the parties, or otherwise mutually agreed upon by the parties. All documents, materials, and information in the possession of each party that are in any way relevant to the dispute shall be made available to the other party for review and copying no later than 30 days after the notice of arbitration is served. The arbitrator(s) shall not have the authority to modify any provision of this Contract or to award punitive damages. The arbitrator(s) shall have the power to issue mandatory orders and restraint orders in connection with the arbitration. The decision rendered by the arbitrator(s) shall be final and binding on the parties, and judgment may be entered in conformity with the decision in any court having jurisdiction. The agreement to arbitration shall be specifically enforceable under the prevailing arbitration law. During the continuance of any arbitration proceeding, the parties shall continue to perform their respective obligations under this Contract.

13. **NOTICE.** Any notice or communication required or permitted under this Contract shall be sufficiently given if delivered in person or by certified mail, return receipt requested, to the addresses listed above or to such other address as one party may have furnished to the other in writing. The notice shall be deemed received when delivered or signed for, or on the third day after mailing if not signed for.

14. **ASSIGNMENT.** Neither party may assign or transfer this Contract without prior written consent of the other party, which consent shall not be unreasonably withheld.

15. **ENTIRE CONTRACT.** This Contract contains the entire agreement of the parties regarding the subject matter of this Contract, and there are no other promises or conditions in any other agreement whether oral or written. This Contract supersedes any prior written or oral agreements between the parties.

Copyright © 2019 Xflight Technologies LLC, Florida, USA

16. **SEVERABILITY.** If any provision of this Contract shall be held to be invalid or unenforceable for any reason, the remaining provisions shall continue to be valid and enforceable. If a court finds that any provision of this Contract is invalid or unenforceable, but that by limiting such provision it would become valid and enforceable, then such provision shall be deemed to be written, construed, and enforced as so limited.

17. **WAIVER OF CONTRACTUAL RIGHT.** The failure of either party to enforce any provision of this Contract shall not be construed as a waiver or limitation of that party's right to subsequently enforce and compel strict compliance with every provision of this Contract.

18. **APPLICABLE LAW.** This Contract shall be governed by the laws of the State of Florida in the USA.

Copyright © 2019 Xflight Technologies LLC, Florida, USA

EXCHANGE OF GOODS

The following provisions relate to the physical exchange of Goods and payment forming the transaction of this agreement.

19. **TITLE/RISK OF LOSS.** Title to and risk of loss of goods shall pass to the buyer upon delivery F.O.B. at the seller's place of home or business to an agent of the buyer including a common carrier, notwithstanding any prepayment or allowance of freight by the seller.

20. **INSPECTION.** Buyer, upon receiving possession of Goods, shall have a reasonable opportunity to inspect the Goods to determine if the Goods conform to the requirements of this Contract. If Buyer, in good faith, determines that all or a portion of the Goods are non-conforming, Buyer may return the Goods to Seller at Buyer's expense. Buyer agrees to securely mail the goods back to buyer with electronic tracking to the address listed above.

21. **PAYMENT.** Payment due shall be made to Xflight Technologies LLC by cash, bank transfer, credit card or PayPal prior to shipment of Goods. If an invoice is not paid when due, seller will not ship Goods to Buyer. In addition to any other right or remedy provided by law, if Buyer fails to pay for the Goods when due or reverses credit card charges after shipment of Goods, Seller has the option to treat such failure to pay as a material breach of this Contract, and may cancel this Contract and/or seek legal remedies.

22. **PAYMENT OF TAXES.** Buyer agrees to pay all taxes of every description, country, federal, state, and municipal, that arise as a result of this sale, excluding income taxes.

Copyright © 2019 Xflight Technologies LLC, Florida, USA