Xflight Technologies LLC

AUTOPILOT User & Installation Guide

November 2019

Xflighttech.com

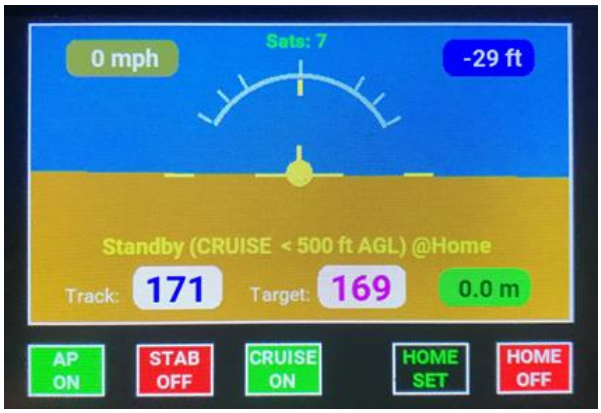

A. Terms, Conditions and Warranty.

These products are only intended to be used in Experimental Aircraft or Ultralights under the full responsibility of the pilot. AHRS and Autopilot components are intended to be used for informational purposes or to manipulate secondary control surfaces only, allowing the pilot full manual control of the aircraft

See Appendix A for details

B. Setup and Connection:

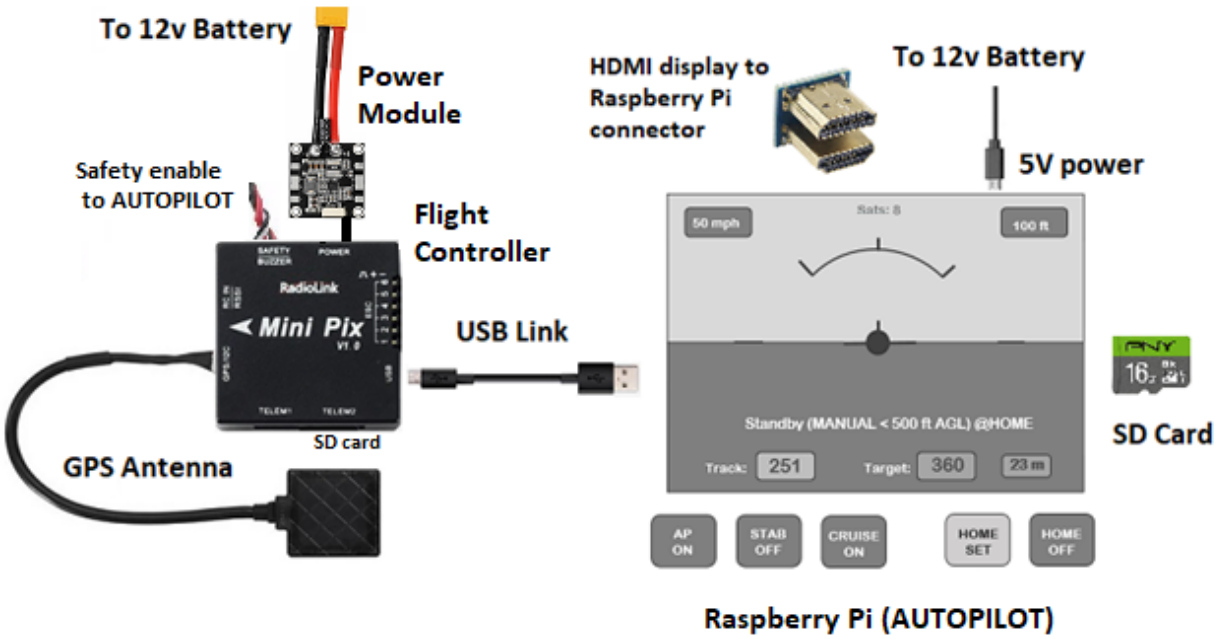

1. Ensure the Display is firmly seated and connected via the HDMI connector

2. Connect the GPS antenna to the Flight Controller GPS/12C socket

3. Connect the Flight Controller micro USB socket to one of the Raspberry Pi (AUTOPILOT) USB sockets

4. Connect the 5v DC power supply to the Raspberry Pi (AUTOPILOT) micro USB connector
   (A backup power supply may be used and connected to the touchscreen micro USB connector)

5. Connect the Power Module to the Flight Controller and 12v battery (via AP switch & fuse circuit)

6. Connect the Safety Enable from the Flight Controller to the Pi (AUTOPILOT) GPIO pins 32 & 30

7. Make sure the SD card (AUTOPILOT software) is firmly seated inside the Raspberry Pi and the SD card in the Flight Controller is also firmly seated (used for logging)

C. Installation Overview

Additional details in section F.

1. Mount the Flight Controller horizontally facing forward, sitting on a padded or foam base to reduce vibration. (Adjustments for setting perfect level and for tail-wheel aircraft will be covered later, under section G - Calibration).

2. Mount the GPS antenna on the dash or somewhere with line of sight to the sky, facing forward.

3. Connect the AUTOPILOT power supply to the battery via a separate switch and 5A fuse (or 10A with TRIM System). Use a separate switch and fuse for the servo power circuits.

4. When installing the AUTOPILOT behind the instrument panel, it is necessary to ensure there is an insulated layer between the touchscreen display surface and the metal panel for proper operation. The plastic frame of the case makes for a good insulating layer.

5. The USB port on the Flight Controller needs to be easily accessible in order to make configuration changes, and access flight logs once installed. (In order to change configuration parameters and access logs, the USB cable to the Raspberry Pi (AUTOPILOT) will be disconnected and a USB cable from the Flight Controller to a PC/Laptop will need to be temporarily connected). Complete calibration (section G) before final Flight Controller installation.

D. Startup

1. Leave servos switched off until you are ready to use the Autopilot in flight. Always power up the AUTOPILOT circuit first.

2. Make sure you are outside with a view to the sky. Upon startup the AUTOPILOT will connect to the Flight Controller (maintaining a heartbeat), and then perform a calibration and verification check (ignore the login prompt). If the Flight Controller is not able to lock onto more than 5 satellites, the AUTOPILOT will keep trying, via a countdown. If it still cannot get a good lock after the countdown, it will start up anyway, and you will be able to see the satellite count for yourself. It will be red if below 6, otherwise green. A red cross will appear if the satellite count is less than 5. (A flashing green light on the GPS antenna also indicates satellites have been acquired). If the satellite count is zero you will need to restart.

3. Make sure the Flight Controller remains stable during startup. Once the AUTOPILOT has started it will lock in the current GPS location, and use this as its Home reference.

4. If either the Flight Controller link is broken (loss of heartbeat) or the satellite count falls below 5, you will see a large red cross appear on the display and the AUTOPILOT will disengage. The AHRS is still working, but the flight data readings cannot necessarily be trusted. Once the AUTOPILOT has reconnected, and/or the satellite count goes back up to 5 or above, the AUTOPILOT will resume normal operation.

E. Operation:

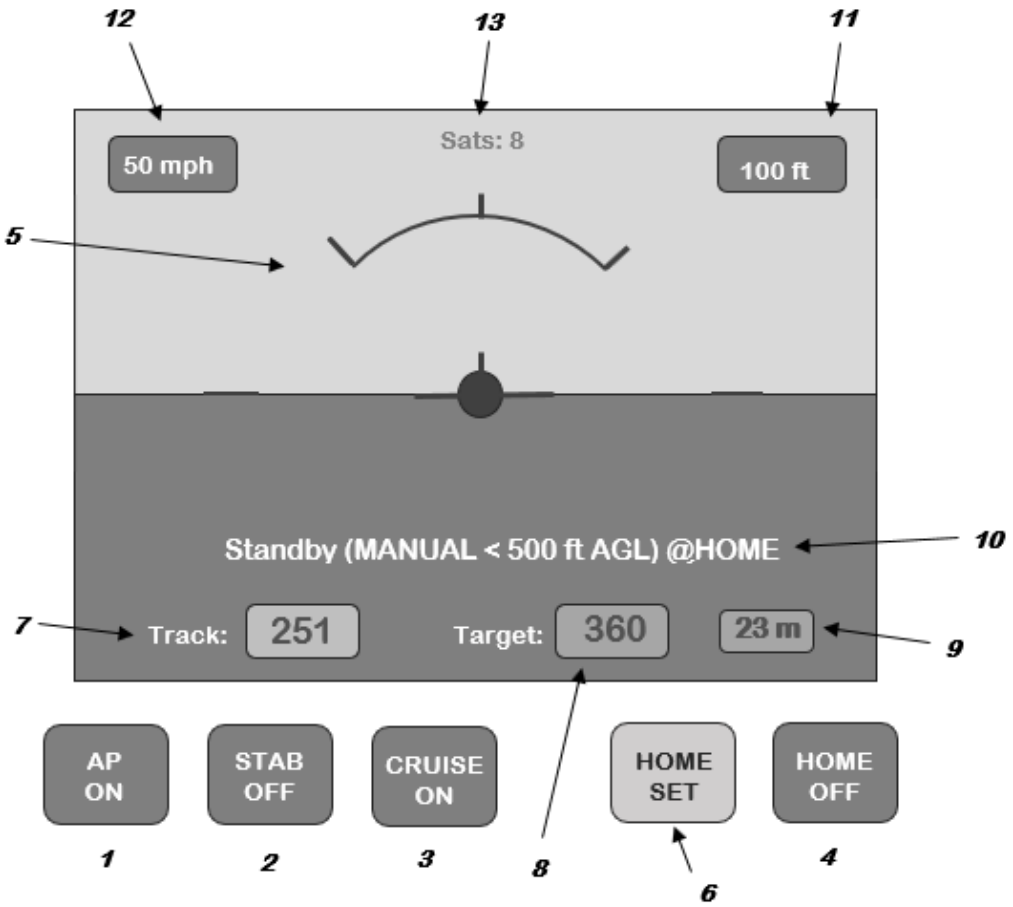

When operating normally the display will provide a smooth indication of attitude as well as the various flight data parameters detailed below.

1. AUTOPILOT ON/OFF
    - Switches the AUTOPILOT ON in Manual flight mode, ready for an automated flight mode to be set (i.e. STAB, CRUISE, HOME). This also enables the Servo PWM signals, starts flight logging (and enables the Trim switches if applicable)
    - Switches the AUTOPILOT OFF, switches back to Manual flight mode, setting all other automated modes OFF. This also disables the Servo PWM signals, stops flight logging

2. STABILIZATION Mode (Wings Level) ON/OFF
    - Seeks to maintain wings level. Altitude/pitch unaffected

3. CRUISE Mode (Heading & Altitude) ON/OFF
    - Seeks to maintain current heading (Target) and current Altitude
    - The minimum altitude is 500 feet AGL for this mode at the Home location. (If below 500 feet AGL at the Home location, the AUTOPILOT will climb to this minimum altitude when in Cruise mode)

4. HOME Mode ON/OFF
    - Return to Home location or RTL (Return To Land), at current altitude
    - The aircraft will turn on to a heading back to the Home location with a maximum bank angle of **20** degrees (configurable). When within **1** mile (configurable) of the location it will perform a **1-mile** left hand (configurable) loiter circle and remain overhead the Home location until the mode is deselected.
    - This button will flash green/blue when within two miles of Home location

5. Bank angle graduations: 0, 30, 45, 60 degrees

6. HOME GPS Lat/Long acquired if SET. (The Home location is SET when the AUTOPILOT starts up)

7. Current heading (continuously displayed, regardless of mode)

8. Target Track (to Home location when in Home mode or Cruise track when in Cruise mode)

9. Ground distance to Home location in miles (continuously displayed, regardless of mode)

10. AUTOPILOT Status
    - This displays current Flight Controller status - STANDBY/ACTIVE, current AUTOPILOT mode and if at Home location
    - STANDBY: Aircraft is on the ground, ready for flight
    - ACTIVE: System is active, and aircraft may already be in flight

11. GPS Altitude above mean sea level (AMSL) in feet (continuously displayed, regardless of mode)

12. Groundspeed in miles per hour (continuously displayed, regardless of mode)

13. Number of satellites locked on. If this drops below 5, you will see a large red cross appear on the display and the AUTOPILOT will disengage (the flight data readings and AHRS will continue to update but cannot necessarily be trusted). Once the satellite count goes back up to 5 or above, the AUTOPILOT will be available again

F. Physical Installation

Wire AUTOPILOT and servo power circuits separately with their own fuse and switch:

AUTOPILOT, Flight Controller Power Module and touchscreen (and optional TRIM system)	Switch and 5A fuse (or 10A w/ TRIM system)
Pitch and Roll Servos	Switch and fuse as per servo requirements

A backup power supply may be used and connected to the touchscreen micro USB connector.

1. AUTOPILOT

The optimal location for the AUTOPILOT is behind the instrument panel.
The rectangular cut-out required will be approx. 3 inches x 2 1/4 inches (76mm x 57mm).
Metal instrument panels will require an insulated layer between the touchscreen display surface and the panel for proper operation. The plastic frame of the case provided makes for a good insulating layer. Simply remove the 4 screws, mount the AUTOPILOT behind the instrument panel with the frame in place, and secure the AUTOPILOT with the screws from the front of the instrument panel.

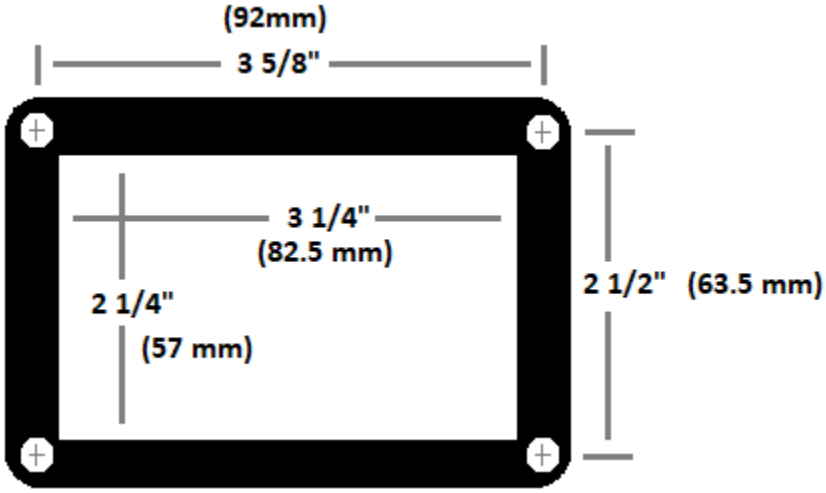

2. Flight Controller

Note: Complete the calibration in section G before final Flight Controller installation as this will need to be manipulated as part of the calibration process.

The Flight Controller needs to be close enough to the AUTOPILOT to connect via the USB link cable (this can be substituted for a longer cable) and close enough to the GPS antenna which is typically mounted on the dashboard. Mount the Flight Controller horizontally and flat facing forward, sitting on a padded or foam base (provided) to reduce vibration, and make sure it cannot move in flight.
The GPS antenna needs to be installed facing forward as it also has a built-in compass and must have a good line of sight to the sky. Satellite reception is good through glass, plastic, wood, fabric, etc., but not through conducting surfaces such as metal.

3. AUTOPILOT / Flight Controller Wiring

The Flight Controller and AUTOPILOT (and TRIM System if applicable) all need to be on a separate circuit to the servo(s) circuit. The AUTOPILOT and Flight Controller need to be powered up at the same time. The AUTOPILOT circuit always needs to be switched on before the servo(s) circuit.

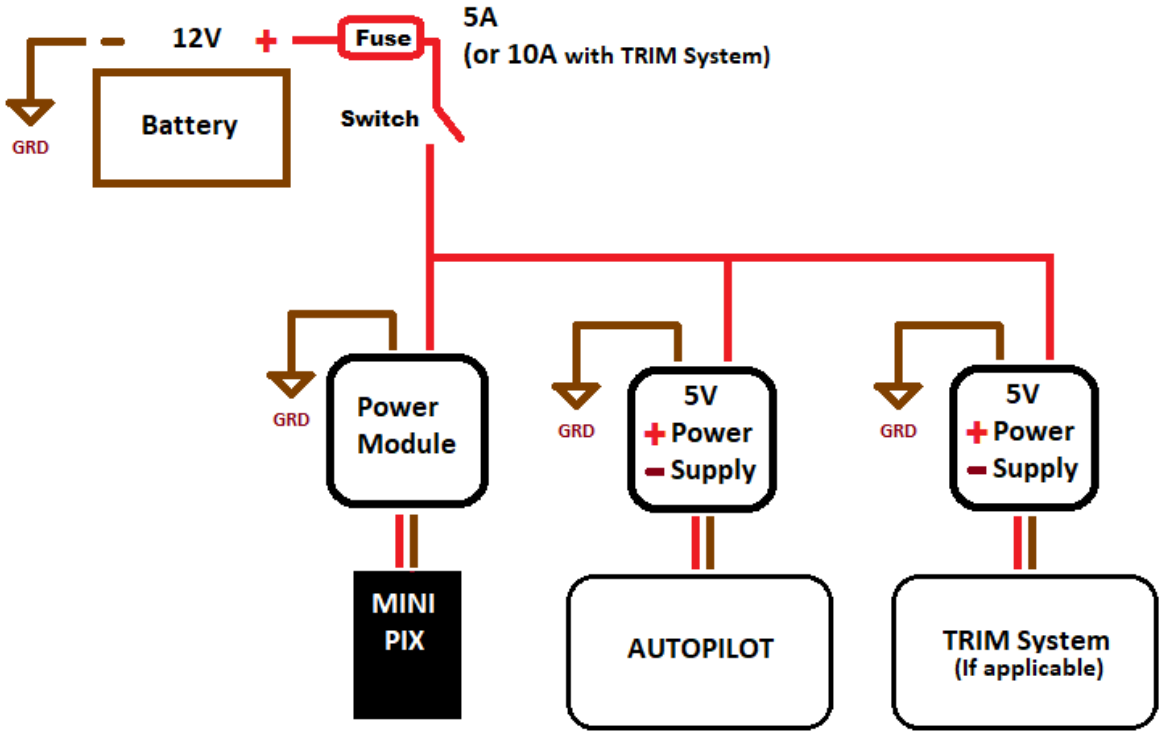

The safety enable switch will already be connected, but for your reference this connects the AUTOPILOT (Raspberry Pi) pin 32 (GPIO 12 signal) and pin 30 (Ground) to the Flight Controller (Mini Pix) via the special cable provided (opto-isolator switch):

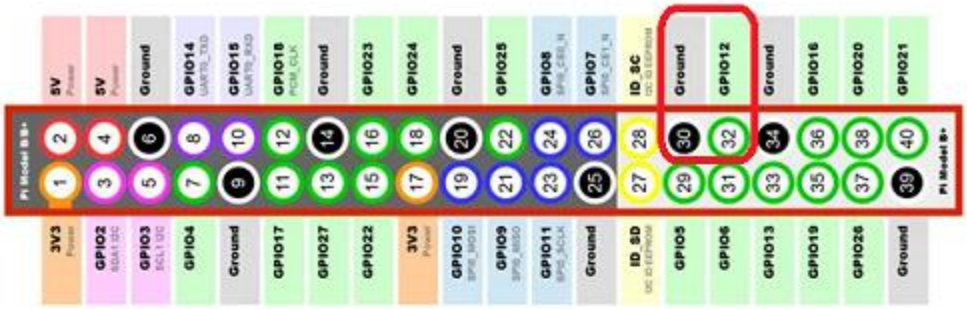

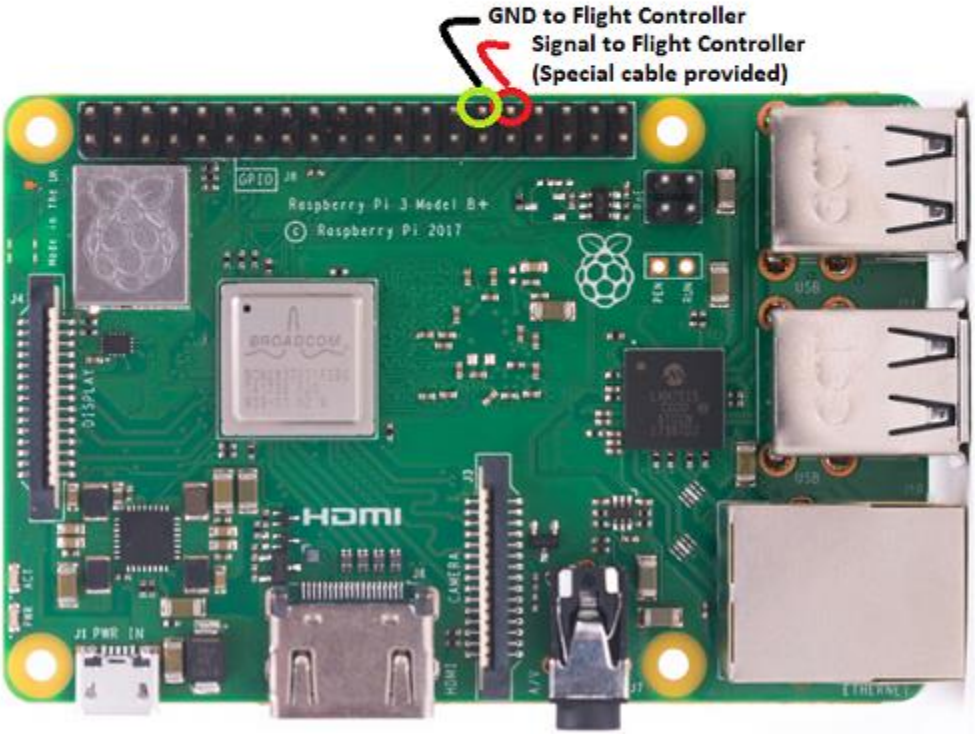

4. SERVO Considerations

This AUTOPILOT is designed to work for trim tabs (or secondary control surfaces) that are relatively small in area, sufficient to control surfaces for Experimental LSA class aircraft or Ultralights.
The PWM servos (high torque) will need to be selected such that they have adequate torque to move these control surfaces in flight against the expected air flow loads.

As previously stated, the power to the servos needs to be on a separate circuit than the AUTOPILOT, with their own switch and fuse. Servo power supplies or regulators should be physically close to the servo in order to ensure minimal voltage drop.

It is recommended that each individual servo power connection be separately fused. This will also assist in easy enabling and disabling of individual servos when it comes to flight testing.

Servo Wiring:

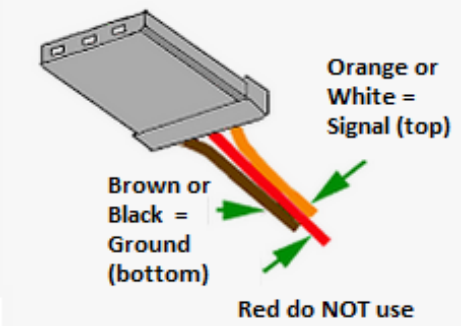

Flight Controller ESC Output 1	Elevator Signal	Orange/White Signal on Top Red (power, middle) do NOT use (cut wire) Brown/Black Ground on Bottom
Flight Controller ESC Output 2	Aileron Signal	Orange/White Signal on Top Red (power, middle) do NOT use (cut wire) Brown/Black Ground on Bottom

The servos use a separate fused power circuit, so the red servo power wire needs to be cut. The servos should be connected to their power supply as below:

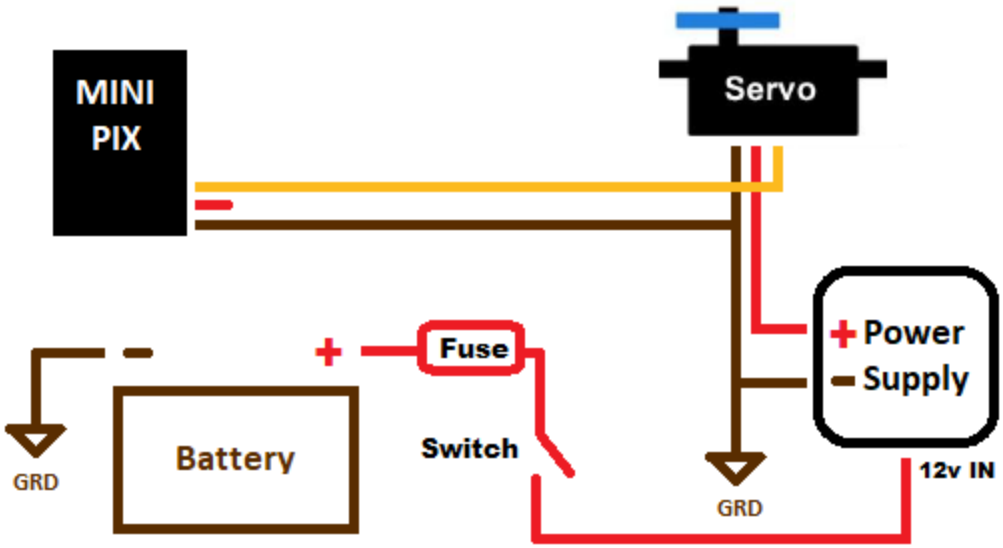

Have a separate fuse for each servo. This will also facilitate disabling one or the other when performing calibration tests for pitch and roll separately.

If you are planning to have more than one servo per axis, e.g. for differential aileron movement, then a Y-cable will need to be used to split the signal to both servos.

It is recommended that shielded cable be used for the servo signal wiring (with the shield connected to ground). Differential drivers are recommended for cable runs greater than 10 feet (available from xflighttech.com).

G. AHRS / COMPASS Calibration

The PC USB connection should be sufficient to power the Flight Controller (if not switch on the AUTOPILOT to power up the Flight Controller power Module)

1. The AUTOPILOT uses the RadioLink MiniPix as its Flight Controller, running opensource ArduPlane software.
   Configurations are made using the ArduPilot Mission Planner application available as a free download from here: http://firmware.ardupilot.org/Tools/MissionPlanner/MissionPlanner-latest.msi

2. Note that you must have the Microsoft .NET framework already installed, this is usually installed by default on the latest Windows OS. It can be downloaded here: https://dotnet.microsoft.com/download/dotnet-framework/net462

3. Mission Planner installation:
   Once you have downloaded the Mission Planner software, double click the executable or **.msi** file, and install on your PC. Allow the device driver to be installed by your operating system.

4. Start the Mission Planner application. Remove the USB cable connecting the AUTOPILOT to the Flight Controller and connect the PC running Mission Planner to the Flight Controller.
   You will now need to see which COM port your PC is using for Mission Planner. The COM port should appear in the Mission Planner **<CONNECT>** drop-down box or you can go into your PC settings/device manager and look for the STMicroelectronics device.
   See example below using COM4:

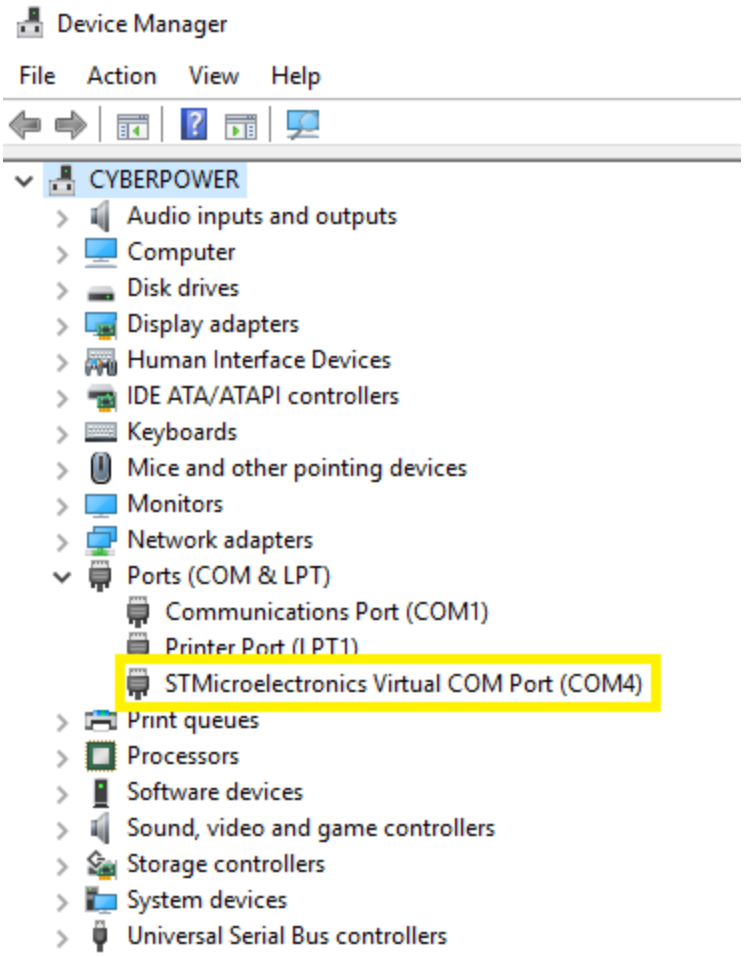

Wait a few seconds for the Flight Controller to initialize after USB connection.
The top right corner of the Mission Planner will show a **<CONNECT>** button. First select the COM port previously identified from the drop-down box, specify 115200 baud rate and hit **<CONNECT>.** Once connected it will download the Flight Controller parameters and the connection icon will turn green.

Once connected the Flight Controller parameters will be read, and available to view/modify.

AHRS Calibration

Make sure the aircraft is straight and level. For tailwheel aircraft make sure that the tail is lifted up, so the aircraft is straight and level to the horizon, as it would be flying.

Use the top left navigation buttons and select **<INITIAL SETUP>** and select **<Accel Calibration>.** Hit the **<Calibrate Level>** button. This will automatically update the **AHRS_TRIM_X** and **AHRS_TRIM_Y** parameters for you. Navigate to **<FLIGHT DATA>** and you should see a properly leveled AHRS display.

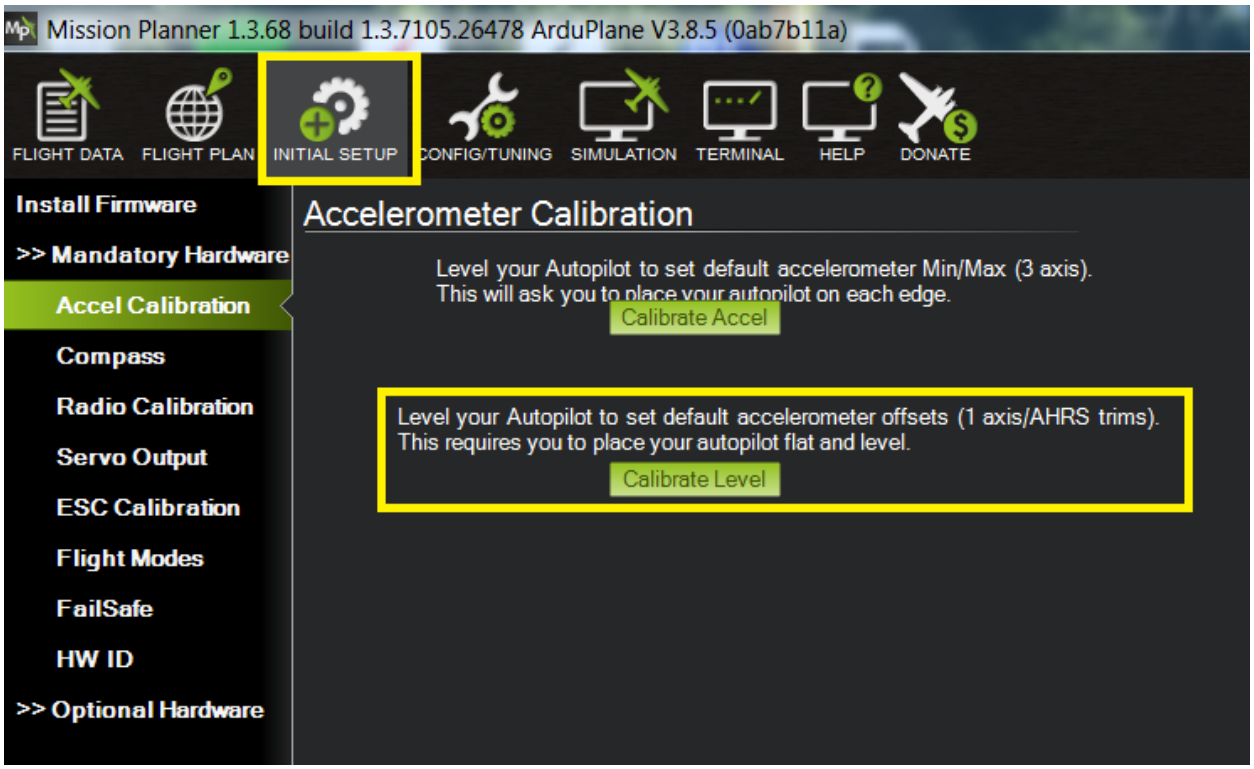

These parameters can also be edited directly:

Use the top left navigation buttons and select **<CONFIG/TUNING>** to view the parameters. Then use the left option list to select **<Full Parameter Tree>.** Under the AHRS section you will find the **AHRS_TRIM** parameters (see screenshot). These fine tune the AHRS to straight and level (as the Flight Controller may not be installed perfectly flat). Once you make a change be sure to click the **<Write Params>** button on the right to save the changes to the Flight Controller. The Mission Planner AHRS display under **<Flight Data>** will update in real-time as these parameters are written. Make sure this appears straight and level, with the red reference plane at the horizon. It is also advisable to take a backup copy of all parameters with **<Save to file>**. It is important to ensure the AHRS is straight and level when the aircraft is trimmed and flying straight and level.

For tailwheel aircraft make sure that the tail is lifted up, so the aircraft is straight and level to the horizon, as it would be flying.

AHRS_TRIM_X	Roll angle tuning in radians* (positive to roll the AHRS reference plane left)
AHRS_TRIM_Y	Pitch angle tuning in radians* (positive to pitch the AHRS reference plane down

**note 0.01 radians is approx. 0.6 degrees.*

If the Flight Controller needs to be installed in a different orientation than flat and pointing straight ahead, this can be accommodated by appropriately setting the **AHRS_ORIENTATION** parameter.

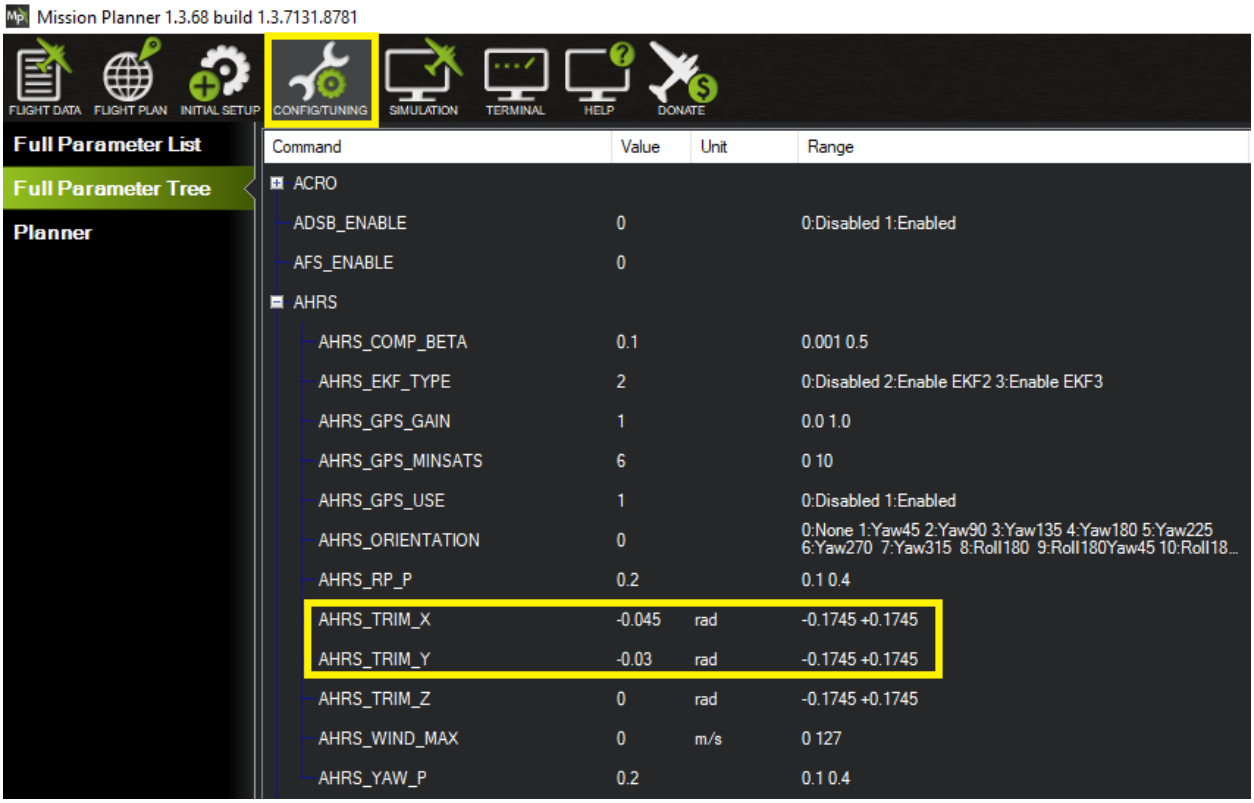

Compass / Accelerometer Calibration

Compasses

The Compasses have been calibrated, however fine adjustments can be made manually in order to ensure the direction is properly indicated in your aircraft, depending on proximity of metal in the airframe and other effects. The full automated calibration process will also be explained.

The AHRS uses 2 compasses and the GPS. Compass #1 is inside the externally mounted GPS antenna, and Compass #2 is inside the Flight Controller.

Under the COMPASS section you will find the **COMPASS_OFS** parameters (see screenshot). These can be manually modified to fine tune the compass heading. Once you make a change be sure to click the **<Write Params>** button on the right to save the changes to the Flight Controller. The Mission Planner heading display under **<Flight Data>** will update in real-time as these parameters are written. It is also advisable to take a backup copy of all parameters with **<Save to file>**.

COMPASS_OFS_X	Offset for Compass 1 in X direction in mGauss
COMPASS_OFS_Y	Offset for Compass 1 in Y direction in mGauss
COMPASS_OFS_Z	Offset for Compass 1 in Z direction in mGauss
COMPASS_OFS2_X	Offset for Compass 2 in X direction in mGauss
COMPASS_OFS2_Y	Offset for Compass 2 in Y direction in mGauss
COMPASS_OFS2_Z	Offset for Compass 2 in Z direction in mGauss

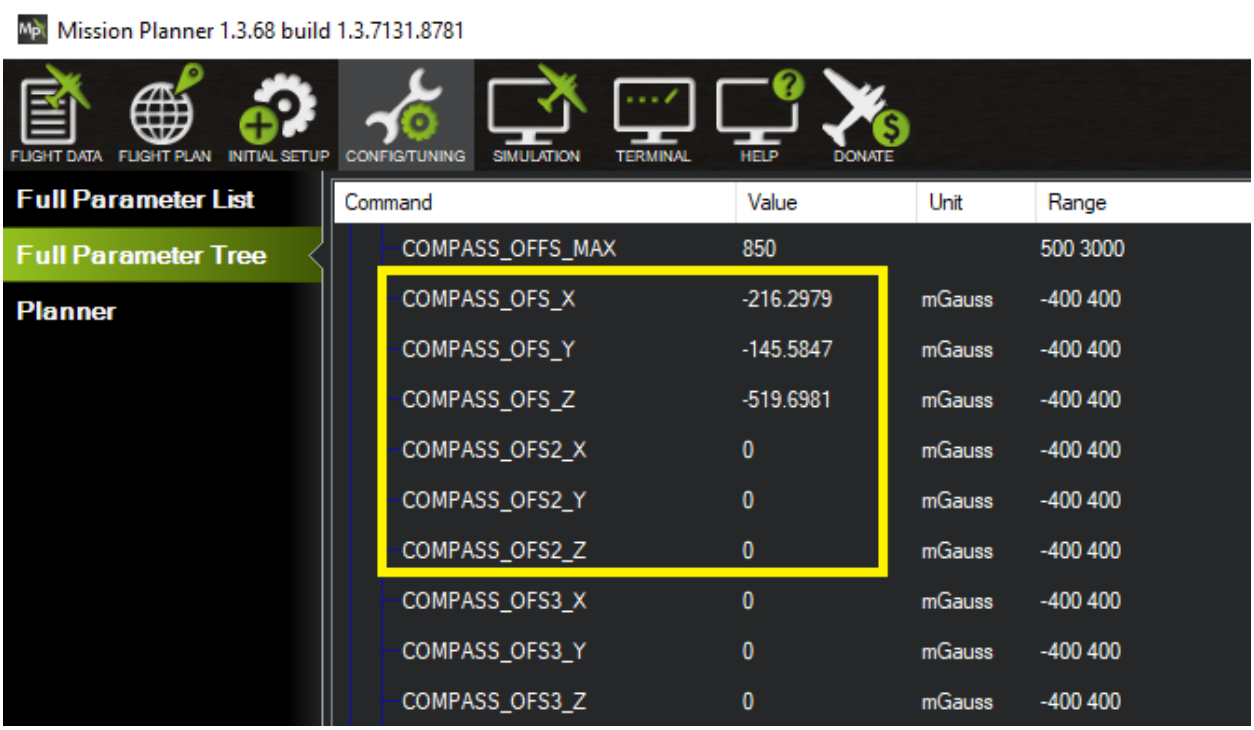

Compasses can also be enabled / disabled in the parameters:

COMPASS_USE	1	0:Disabled 1:Enabled	Enable or disable the use of the compass (instead of the GPS) for determining heading
COMPASS_USE2	1	0:Disabled 1:Enabled	Enable or disable the second compass for determining heading.
COMPASS_USE3	0	0:Disabled 1:Enabled	Enable or disable the third compass for determining heading.

You can perform the full compass and accelerometer calibration process prior to installation if desired, by selecting **<INITIAL SETUP>** from the navigation buttons, then follow the setup wizard prompts under **>> Mandatory Hardware**.

Select **<Compass>,** then for a simple calibration select **<Pixhawk/PX4>** and follow the prompts. Ensure the GPS antenna and Flight Controller are taped together when performing this and oriented in the same direction (the GPS antenna has a built-in compass).

For a more comprehensive calibration select **<Live Calibration>**, and follow the prompts, moving the flight controller / external compass around as directed.

Live Calibration:

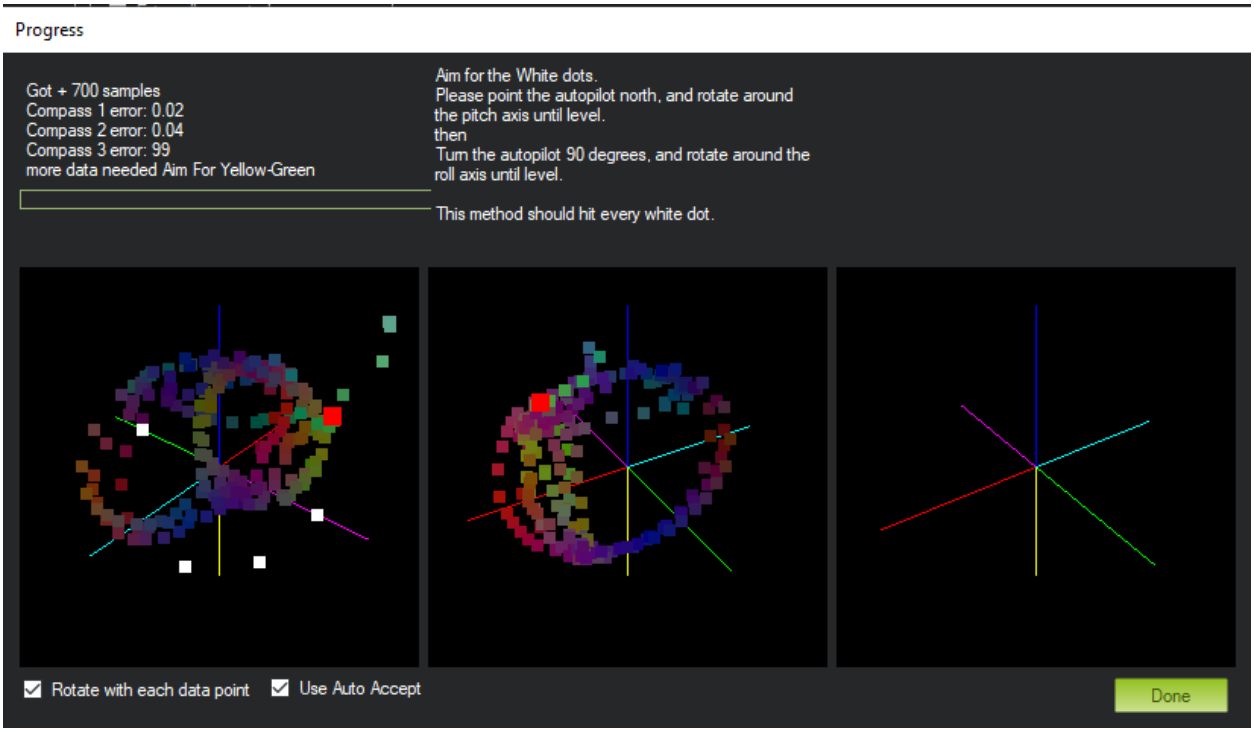

Move the flight controller / GPS antenna as directed: Point North, and rotate around pitch axis until level, then turn 90 degrees and rotate around the roll axis until level, hitting every white dot.

Accelerometers

Select **<Accel Calibration>**, select the two calibration options and follow the prompts.

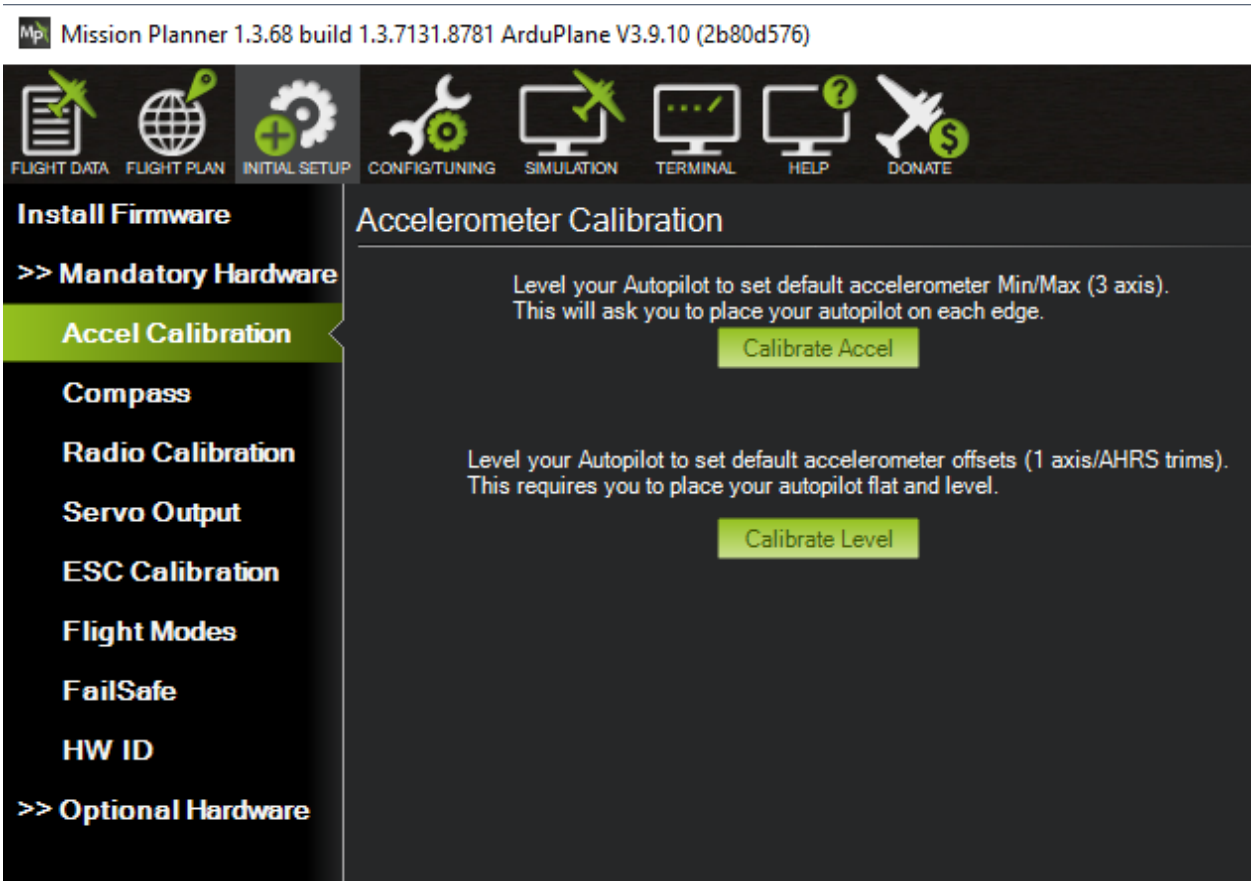

H. SERVO Setup

It is important to ensure the servos are correctly orientated and ranges set.

The Flight Controller has been pre-configured to the following servo mappings:

Function	Parameter	Value	Servo (Output Channel)
Elevator (Pitch)	SERVO1	19 (Elevator)	1
Aileron (Roll)	SERVO2	4 (Aileron)	2

PWM (Pulse Width Modulation) servos act over a range of pulse width values typically ranging from 1000 µs to 2000 µs. These values define the min and max movement of the servo and hence the control surface, typically over 90 degrees of servo movement. The following parameters can be adjusted to limit min and max ranges (i.e. end points) as well as normal/reverse direction of movement:

These setting can be found under **SERVO1** and **SERVO2**:

SERVO1_FUNCTION	19	Function (**19 = Elevator**)
SERVO1_MAX	1900	Maximum deflection
SERVO1_MIN	1100	Minimum deflection
SERVO1_REVERSED	0	Direction of movement (**0 = Normal, 1 = Reversed**)
SERVO1_TRIM	1500	Mid value (Trim)

SERVO2_FUNCTION	4	Function (**4 = Aileron**)
SERVO2_MAX	1900	Maximum deflection
SERVO2_MIN	1100	Minimum deflection
SERVO2_REVERSED	0	Direction of movement (**0 = Normal, 1 = Reversed**)
SERVO2_TRIM	1500	Mid value (Trim)

Note that by default Servo Auto Trim is enabled. When the aircraft is close to level in a stabilized flight mode, the servo trim is saved every 10 seconds, and persists between flights. This ensures that when manual flight is selected, there should be no difference in trim. This can be disabled / enabled under **SERVO** settings:

SERVO_AUTO_TRIM	1	Servo Auto Trim **(1 = Enabled, 0 = Disabled)**

Servo Installation Tips:

- Install servos such that they do not interfere with primary control surface operation. Even if servos get stuck fully extended, you should still have full manual control of the aircraft

- Make sure the secondary / trim flight control surfaces move smoothly from max up to max down deflection across a good portion of the servo full range rotation. I.e. do not have them be so sensitive that the servo only moves through a small rotation for full deflection or moves through a large rotation for a very small deflection

- Make sure there is no possibility of the servos being driven beyond the control surface hard stops. You can define end points in the parameters above.

- Ensure the servo torque rating is sufficient for the loads required

- Ensure you provide a regulated power source for the servos as specified by the manufacturer for maximum torque

- If your servos jitter and are constantly moving to remain stationary when in use, you may have to upgrade to larger servos, or check your **P I D** values (see sections K and L below). Continuous servo jitter will cause them to get very hot, and possibly fail

- It is recommended to use shielded cable (shield connected to ground) for all servo wires, and to use differential drivers for cable runs greater than 10 feet

- Avoid switching the servo circuit on when on the ground, during take-off and landing, when flying at low level, and when the AUTOPILOT is not powered up (the AUTOPILOT circuit should always be powered up first), as the servo signal wires may be susceptible to noise pickup

The following sections will check for correct servo orientation and calibration

The first step is to ensure the aircraft flies straight and level (additional or existing static trim tabs may also be used to achieve this) with the servo control surfaces / trim tabs in a neutral position with the servos at their mid-range values (1500).

Ensure that calibration in section G has been completed.

It is recommended that you calibrate one axis at a time, and make sure to keep a copy of the default parameter file before you begin (as described in Section G).

I. PITCH Axis Servo Orientation (on the ground)

With the AUTOPILOT installed and AHRS/Compass calibration complete for straight and level and the elevator trim tab and servo installed with the aircraft flying straight and level, you will now be able to set up the pitch axis orientation.

Ensure the correct direction of movement:

1. With the aircraft on the ground in a straight and level configuration, as it would be in flight and able to receive satellite signal, switch on the AUTOPILOT. Wait a few seconds for the Flight Controller to initialize, and the AUTOPILOT to start up and display the AHRS screen.

2. Now switch on the servo circuit to power up the pitch servo. Ensure the elevator trim tab is at its correct neutral trim position.

3. Ensure the AHRS is level, then select the **<AP>** button (first touchscreen button from the left) to switch the AUTOPILOT into Manual flight mode and ready to accept an Automated flight mode (for safety reasons there is a two-step process to enable an Automated flight mode). You should see **<AP ON>** in green.

4. Wait a second or two, then select the **<CRUISE>** button (third touchscreen button from the left) to switch the AUTOPILOT into Cruise mode. You should see **<CRUISE ON>** in green.

5. Now go to the rear of the aircraft and pull the tail down to affect a pitch up movement of the aircraft (or gently pitch up the Flight Controller to simulate aircraft pitch up). You should see the elevator tab move. Ensure this moves in the correct direction that would restore the aircraft to straight and level. I.e. pitch down. For a trim tab on a moveable elevator control surface, this would be an upward movement of the trim tab (allowing the airflow against the trim tab to push the elevator down).

Action	Control Surface	Expected Movement
Pitch up of aircraft	Elevator Trim Tab	Up
Pitch down of aircraft	Elevator Trim Tab	Down

Repeat for pitch down.

If this is reversed, then you will need to change the **SERVO1 _REVERSED** parameter discussed above.

SERVO1_REVERSED = **0** (Normal) or **SERVO1_REVERSED** = **1** (Reversed)

If you do not see enough of a movement to be certain, then you can temporarily increase the pitch gain by increasing the **PTCH2SRV_P** parameter under the **PTCH2SRV** section. This parameter is covered in more detail in section L below.

6. The AUTOPILOT and servo can now be switched off.

J. ROLL Axis Servo Orientation (on the ground)

With the AUTOPILOT installed and AHRS/Compass calibration complete for straight and level and the secondary aileron or trim tab and servo(s) installed with the aircraft flying straight and level, you will now be able to set up the roll axis orientation.

Ensure the correct direction of movement:

1. With the aircraft on the ground in a straight and level configuration, as it would be in flight and able to receive satellite signal, switch on the AUTOPILOT. Wait a few seconds for the Flight Controller to initialize, and the AUTOPILOT to start up and display the AHRS screen.

2. Now Switch on the servo circuit to power up the roll servo(s). Ensure the secondary aileron control surfaces or aileron trim tab are at their correct neutral trim positions.

3. Ensure the AHRS is level, then select the **<AP>** button (first touchscreen button from the left) to switch the AUTOPILOT into Manual flight mode and ready to accept an Automated flight mode (for safety reasons there is a two-step process to enable an Automated flight mode). You should see **<AP ON>** in green.

4. Wait a second or two, then select the **<CRUISE>** button (third touchscreen button from the left) to switch the AUTOPILOT into Cruise mode. You should see **<CRUISE ON>** in green

5. Now very gently roll the Flight Controller to the left to simulate a roll of the aircraft to the left. Make sure the control surfaces move in the correct direction to re-establish straight and level as per below.

Action	Control Surface	Expected Movement
Left roll of Flight Controller	Port Secondary Aileron	Down
Left roll of Flight Controller	Starboard Secondary Aileron	Up

OR

Left roll of Flight Controller	Port Aileron Trim Tab	Up
Left roll of Flight Controller	Starboard Aileron Trim Tab	Down

Repeat for roll right.

If this is reversed, then you will need to change the **SERVO2 _REVERSED** parameter discussed above.

SERVO2_REVERSED = **0** (Normal) or **SERVO2_REVERSED** = **1** (Reversed)

If you do not see enough of a movement to be certain, then you can temporarily increase the roll gain by increasing the **RLL2SRV_P** parameter under the **RLL2SRV** section. This parameter is covered in more detail in section K below.

6. The autopilot and servo(s) can now be switched off

K. ROLL Axis Gain Calibration (in flight)

This step will calibrate the roll axis only to ensure the gain is set correctly to allow for a smooth correction to roll and heading in flight. Pick a clear area on a good weather day with very little wind for this test and fly at a safe altitude away from populated areas.

Make sure the pitch servo power is disconnected or switched off prior to starting, this test is only for roll. This will likely take a few flights to fine tune. **Make sure to do clearing turns before any maneuver to ensure there is no other traffic in the area.**

1. Prior to takeoff power up the AUTOPILOT. This will display the AHRS and set the Home location. **Leave the servo(s) circuit powered down**.

2. Takeoff and fly straight and level at a typical cruise speed at a safe altitude. The AHRS display should be straight and level.

3. Select **AP ON**. This will enable the Servo PWM signals and start flight logging. Power up the roll servo(s). **Immediately switch the AUTOPILOT off (AP OFF) or power down the roll servo(s) if you experience any adverse reaction.**

4. Wait a second or two, then select **STAB ON** to enter wings stabilization mode.

5. The current heading should not change much. **Immediately switch the AUTOPILOT off (AP OFF) or power down the roll servo(s) if you experience any adverse reaction.**

6. Put in a rapid bank angle for a couple of seconds and then release the yoke. Do the same in the opposite direction. You want the plane to roll out smoothly and gently, with wings level on the new heading (note this mode does not track a heading). **Immediately switch the AUTOPILOT off (AP OFF) or power down the roll servo(s) if you experience any adverse reaction.**

7. Next, from straight and level with the roll servo(s) powered up and the AUTOPILOT on (**AP ON**), select **CRUISE ON** (Cruise mode). The AUTOPILOT should now display a **Target** heading (this is the heading it locked in as the current heading to follow. The **Track** is your actual heading and should remain within a few degrees of the **Target** heading, depending on wind. **Immediately switch the AUTOPILOT off (AP OFF) or power down the roll servo(s) if you experience any adverse reaction.**

8. Again, put in a bank angle for a couple of seconds and then release the yoke. Do the same in the opposite direction. You want the plane to roll back smoothly and gently to re-acquire the **Target** heading (note if its windy the aircraft will crab into the wind, to maintain the GPS target). The maximum bank angle has been configured for **20** degrees. **Immediately switch the AUTOPILOT off (AP OFF) or power down the roll servo(s) if you experience any adverse reaction.**

9. When complete allow servos to return to a neutral position, then switch the AUTOPILOT off (**AP OFF**) and/or power down the roll servo(s).

10. If the roll response is too slow then you will need to increase **RLL2SRV_P** when back on the ground in small increments around 0.1 or 0.2 until you are happy with the response. This is the most important roll tuning parameter.

RLL2SRV	RLL2SRV_P	Bank angle error to Aileron gain (default = **2**)

If you get bank angle oscillation or overshoot, then you will need to reduce **RLL2SRV_P** when back on the ground in increments of 0.1.

11. Once you are happy with the roll response you should slowly adjust the **RLL2SRV_D** in steps of 0.01. Increasing this parameter will reduce the tendency to overshoot.

12. You can also adjust the **RLL2SRV_I** response in steps of 0.05 to allow the aircraft to cope better with wind. If you see overshoot or oscillation when raising the **RLL2SRV_I** value, then halve it.

13. If you see unexpected rapid servo movement then your PID gains may be too high; this may cause the servos to overheat.

14. If you are not able to achieve smooth roll reactions, then recheck AHRS level configurations and/or roll axis orientation. A more detailed explanation can be found here:
http://ardupilot.org/plane/docs/roll-pitch-controller-tuning.html
If all else fails, then contact steve@xflighttech.com for support.

L. PITCH Axis Gain Calibration (in flight)

This step will calibrate the pitch axis only to ensure the gain is set correctly to allow for a smooth correction to pitch and altitude in flight. Pick a clear area on a good weather day with very little wind for this test and fly at a safe altitude away from populated areas.

Make sure the roll servo power is disconnected or switched off prior to starting, this test is only for pitch. This will likely take a few flights to fine tune. **Make sure to do clearing turns before any maneuver to ensure there is no other traffic in the area.**

1. Prior to takeoff power up the AUTOPILOT. This will display the AHRS and set the Home location. **Leave the servo(s) circuit powered down**.

2. Takeoff and fly straight and level at a typical cruise speed at a safe altitude. The AHRS display should be straight and level.

3. Select **AP ON**. This will enable the Servo PWM signals and start flight logging. Power up the pitch servo. **Immediately switch the AUTOPILOT off (AP OFF) or power down the pitch servo if you experience any adverse reaction.**

4. Wait a second or two, then select **CRUISE ON** to enter Cruise mode. Note the altitude.

5. The current altitude should not change much. **Immediately switch the AUTOPILOT off (AP OFF) or power down the pitch servo if you experience any adverse reaction.**

6. Put in a gentle pitch angle for a couple of seconds to change altitude and then release the yoke. Do the same in the opposite direction. You want the plane to pitch back smoothly and gently to the original altitude. **Immediately switch the AUTOPILOT off (AP OFF) or power down the pitch servo if you experience any adverse reaction.**

7. When complete allow the servo to return to a neutral position, then switch the AUTOPILOT off (**AP OFF**) and/or power down the pitch servo.

8. If the pitch response is too slow then you will need to increase **PTCH2SRV_P** when back on the ground in increments of 0.1 or 0.2 until you are happy with the response. This is the most important pitch tuning parameter.

PTCH2SRV	PTCH2SRV_P	Pitch angle error to Elevator gain (default = **2**)

   If you get pitch oscillation or overshoot, then you will need to reduce **PTCH2SRV_P** when back on the ground in increments of 0.1.

9. Once you are happy with the roll response you should slowly adjust the **PTCH2SRV_D** in steps of 0.01. Increasing this parameter will reduce the tendency to overshoot.

10. You can also adjust the **PTCH2SRV_I** response in steps of 0.05. If you see overshoot or oscillation when raising the **PTCH2SRV_I** value, then halve it.

11. If you see unexpected rapid servo movement then your PID gains may be too high; this may cause the servos to overheat.

12. The **PTCH2SRV_RLL** parameter is used to keep the nose level during turns.
    If the aircraft gains height during turns then you need to reduce **PTCH2SRV_RLL** by small increments of 0.05. If the aircraft immediately descends during turns, then increase the **PTCH2SRV_RLL** by small increments of 0.01.

13. If you are not able to achieve smooth pitch reactions, then recheck AHRS level configurations and/or pitch axis orientation. A more detailed explanation can be found here:
    http://ardupilot.org/plane/docs/roll-pitch-controller-tuning.html
    If all else fails, then contact steve@xflighttech.com for support.

In Summary

This table shows an overall general summary of the effect of **raising PID** gain values:

PID Parameter (increasing)	Time to Target	Overshoot	Settling Time	Steady-State Error	Stability
P	**Decrease**	**Increase**	**Small Increase**	**Decrease**	**Degrade**
I	**Small Decrease**	**Increase**	**Increase**	**Large Decrease**	**Degrade**
D	**Small Decrease**	**Decrease**	**Decrease**	**Minor Change**	**Improve**

M. FINAL and HOME Flight Tests

The final flight test will be to test pitch and roll together as well as return to HOME location.

Again, pick a clear area on a good weather day with very little wind for this test and fly at a safe altitude away from populated areas.

Make sure to do clearing turns before any maneuver to ensure there is no other traffic in the area.

1. Prior to takeoff power up the AUTOPILOT. **Leave the pitch and roll servos switched off.**

2. Takeoff and fly straight and level at a typical cruise speed at a safe altitude. The AHRS display should be straight and level.

3. Select **AP ON** and power up the pitch and roll servos.

4. Select **CRUISE ON** to enter Cruise mode.
   The AUTOPILOT should maintain the current heading and altitude. **Immediately switch the AUTOPILOT off (AP OFF) or power down the servo(s) if you experience any adverse reaction.**

5. Fly at least 3 miles away from the airport.

6. Return to Home Test:
   Select **HOME ON** to enter RTL (Return to Land) mode. The AUTOPILOT should now display the Home heading as the **Target** heading (the **Track** is your actual heading) and acquire this heading with a maximum bank angle of **20** degrees while maintaining current altitude. **Immediately switch the AUTOPILOT off (AP OFF) or power down the servos if you experience any adverse reaction.** The maximum bank angle is configurable:

LIM	**LIM_ROLL_CD**	2000	In cdeg (centi-degrees)

7. Once you are within 2 miles of the airport the **HOME** button will start to flash. The aircraft will then enter a 1-mile radius left hand loiter circle above the airport at current altitude until the HOME mode is disengaged, or the AUTOPILOT has been switched off. The loiter circle parameters are configurable:

RTL	**RTL_RADIUS**	-1609*	In meters Negative for counter-clockwise Positive for clockwise

   **Note 1,609 meters is 1 mile*

8. When complete allow servos to return to a neutral position, then switch the AUTOPILOT off (**AP OFF**) and/or power down the servos.

N. LOGFILE Access

Log files are available via the Mission Planner. This will give you access to many different flight parameters as well as the ability to view your flight track on Google Earth.

The PC USB connection should be sufficient to power the Flight Controller (if not connect the Flight Controller power module). Remove the USB cable connecting the AUTOPILOT to the Flight Controller and connect the PC running Mission Planner to the Flight Controller.

While connected to the Flight Controller, select **<FLIGHT DATA>** from the navigation buttons, then select **<DataFlash Logs>** from the tabs at the bottom. Select **<Download DataFlash Log Via Mavlink>** (if you get a message requesting to disarm the controller hit **<OK>**). This will bring up a Log Downloader box, where you can download all or individual logs.

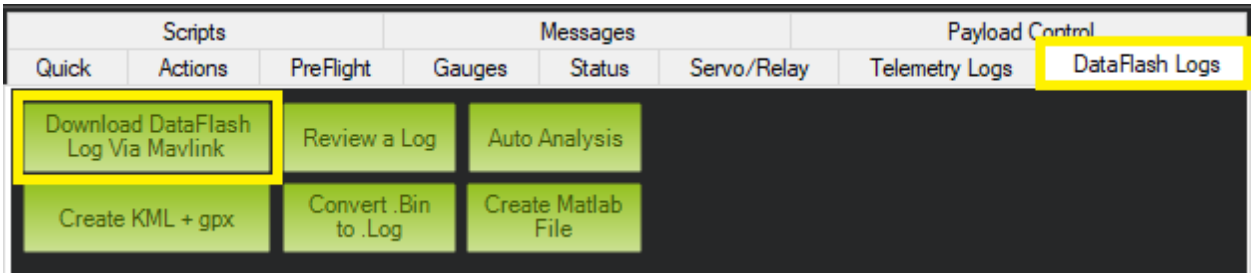

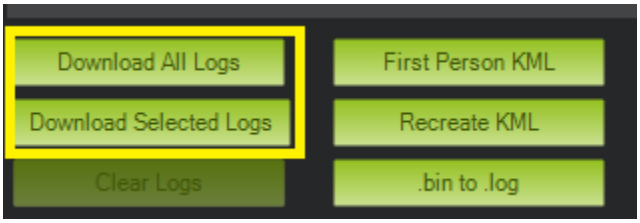

The Logs will be saved in your Mission Planner directory:
(typically - C:\users\<*Your Name*>\Documents\Mission Planner\logs\FIXED_WING\1)

Once loaded you can either review the logs within the Mission Planner graphing function **<Review a Log>** or view the flight path in Google Earth with the **.kmz** and **.gpx** files. These files are automatically created.

To see the flight path in Google Earth, simply drag the files from the Mission Planner directory into Google Earth.

The **.kmz** file will show your flight path and altitude and the **.gpx** file will show your GPS waypoint data in KML format.

You can also create the **.gpx** and **.kmz** files from the **.bin** file manually by selecting <**Create KML + gpx**> from the options:

Note that you will NOT have the tlogs (telemetry logs)

A more detailed description of the logs and graphing options is available here: http://ardupilot.org/plane/docs/common-downloading-and-analyzing-data-logs-in-mission-planner.html

Track and Elevation Profile (speed/altitude) on Google Earth

The pink track below shows the HOME / RTL (Return to Land) track and 1-mile radius loiter circles above the HOME location. There are 2 ½ circles here, with the autopilot maintaining very high precision orbits.

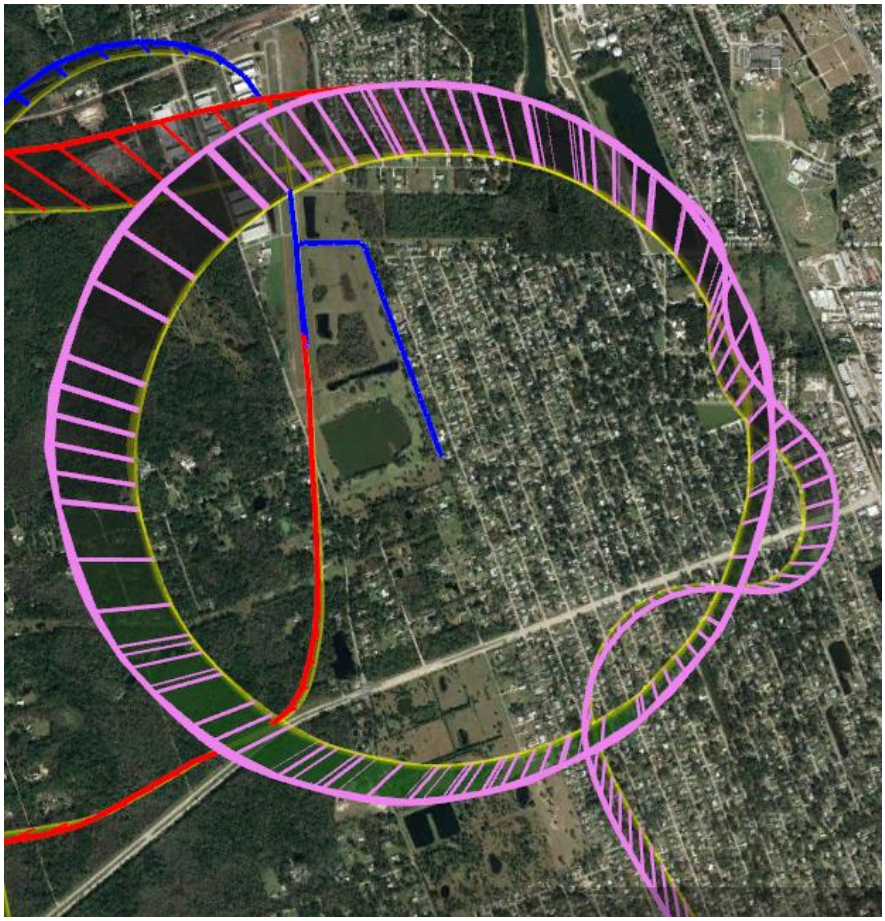

For a full description of all parameters please visit: http://ardupilot.org/plane/docs/parameters.html

But please note this includes all the ArduPlane parameters, which are not all relevant.

Appendix A.

Xflight Technologies LLC Terms, Conditions and Warranty

1. **PARTIES.** This Contract represents the terms and conditions of sale of Xflight Technologies Products by and between Xflight Technologies LLC, of 1982 State Rd 44, New Smyrna Beach, Florida 32168, USA (“Seller”), and Buyer (“Buyer”).

2. **ITEMS PURCHASED**. Seller agrees to sell, and Buyer agrees to buy, one or more of the following products (the "Goods") in accordance with the terms and conditions of this Contract:

Products
Xflight AutoPilot and related sub-components
Xflight AHRS and related sub-components

3. **INTELLECTUAL PROPERTY.** Intellectual property created, made, or originated by the officers, employees, or contractors of Seller shall remain the sole and exclusive property of Seller. Any intellectual property associated with Goods, specifically the software, shall remain the property of Seller. Seller retains all rights to its pre-existing intellectual property and any intellectual property it creates in connection with the development and manufacturing of the Goods of this agreement. Parties agree that Seller will retain ownership of all rights in any invention and work product developed pursuant to the agreement and acknowledges that all materials created by the Seller pursuant to and related to the agreement belong to the Seller under United States intellectual property laws.

4. **WARRANTIES.** The Goods are sold on an "AS IS" basis. SELLER SHALL IN NO EVENT BE LIABLE FOR ANY INCIDENTAL, SPECIAL, OR CONSEQUENTIAL DAMAGES OF ANY NATURE, EVEN IF SELLER HAS BEEN ADVISED OF THE POSSIBILITY OF SUCH DAMAGES. Seller's liability, if any, for defective Goods, is limited to replacement, repair or refund of the defective Goods, at Seller's option for up to 30 days from date of purchase.

5. **PERSONAL USE**. Buyer agrees to limit the operation and use of purchased Goods to personal recreational use. Buyer agrees to not develop or resell Goods, its components, or documentation to another party without Seller’s written authorization.

6. **PRODUCT RISKS**. Buyer acknowledges that the ownership and operation of newly developed autopilot and AHRS products, including the subject Goods contemplated by this contract, comes with many unforeseeable risks and potential hazards. Buyer has reviewed the risks, safety hazards and recommendations provided by Seller in the User Guide. Buyer has considered these risks and represents himself as a consumer with a

sophisticated understanding of aircraft operation and mechanics, vehicle physics, flying safety protocols, and the concepts underlying the Goods' design. Buyer accepts all foreseeable and unforeseeable risks associated with the ownership and operation of the Goods, components, and related equipment.

7. **INDEMNIFICATION.** Buyer shall defend, indemnify, and hold harmless Seller, including its officers and agents, from any and all actual or alleged claims, demands, causes of action, liability, loss, damage and/or injury (to property or persons, including without limitation wrongful death), associated with the ownership and operation of the Goods of this contract. This indemnity shall apply in all actions, whether brought by an individual or other entity, or imposed by a court of law or by administrative action of any federal, state, or local governmental body or agency, arising out of or incident to any acts, omissions, negligence, or willful misconduct of Buyer, its personnel, employees, agents, contractors, or volunteers in connection with or arising out of Buyer's actions. This indemnification applies to and includes, without limitation, the payment of all penalties, fines, judgments, awards, decrees, attorneys' fees, and related costs or expenses, and any reimbursements to Seller for all legal expenses and costs incurred by it.

8. **REMEDIES ON DEFAULT.** In addition to any and all other rights a party may have available according to law, if a party defaults by failing to substantially perform any provision, term or condition of this Contract (including without limitation the failure to make a monetary payment when due), the other party may terminate the Contract by providing written notice to the defaulting party. This notice shall describe with sufficient detail the nature of the default. The party receiving such notice shall have 30 days from the effective date of such notice to cure the default(s). Unless waived by a party providing notice, the failure to cure the default(s) within such time period shall result in the automatic termination of this Contract.

9. **ARBITRATION**. Any controversies or disputes arising out of or relating to this Contract shall be resolved by binding arbitration in accordance with the then-current Commercial Arbitration Rules of the American Arbitration Association. The parties shall select a mutually acceptable arbitrator knowledgeable about issues relating to the subject matter of this Contract. In the event the parties are unable to agree to such a selection, each party will select an arbitrator and the two arbitrators in turn shall select a third arbitrator, all three of whom shall preside jointly over the matter. The arbitration shall take place at a location that is reasonably centrally located between the parties, or otherwise mutually agreed upon by the parties. All documents, materials, and information in the possession of each party that are in any way relevant to the dispute shall be made available to the other party for review and copying no later than 30 days after the notice of arbitration is served. The arbitrator(s) shall not have the authority to modify any provision of this Contract or to award punitive damages. The arbitrator(s) shall have the power to issue mandatory orders and restraint orders in connection with

the arbitration. The decision rendered by the arbitrator(s) shall be final and binding on the parties, and judgment may be entered in conformity with the decision in any court having jurisdiction. The agreement to arbitration shall be specifically enforceable under the prevailing arbitration law. During the continuance of any arbitration proceeding, the parties shall continue to perform their respective obligations under this Contract.

10. **NOTICE.** Any notice or communication required or permitted under this Contract shall be sufficiently given if delivered in person or by certified mail, return receipt requested, to the addresses listed above or to such other address as one party may have furnished to the other in writing. The notice shall be deemed received when delivered or signed for, or on the third day after mailing if not signed for.

11. **ASSIGNMENT.** Neither party may assign or transfer this Contract without prior written consent of the other party, which consent shall not be unreasonably withheld.

12. **ENTIRE CONTRACT.** This Contract contains the entire agreement of the parties regarding the subject matter of this Contract, and there are no other promises or conditions in any other agreement whether oral or written. This Contract supersedes any prior written or oral agreements between the parties.

13. **SEVERABILITY.** If any provision of this Contract shall be held to be invalid or unenforceable for any reason, the remaining provisions shall continue to be valid and enforceable. If a court finds that any provision of this Contract is invalid or unenforceable, but that by limiting such provision it would become valid and enforceable, then such provision shall be deemed to be written, construed, and enforced as so limited.

14. **WAIVER OF CONTRACTUAL RIGHT.** The failure of either party to enforce any provision of this Contract shall not be construed as a waiver or limitation of that party's right to subsequently enforce and compel strict compliance with every provision of this Contract.

15. **APPLICABLE LAW.** This Contract shall be governed by the laws of the State of Florida in the USA.

EXCHANGE OF GOODS

The following provisions relate to the physical exchange of Goods and payment forming the transaction of this agreement.

16. **TITLE/RISK OF LOSS.** Title to and risk of loss of goods shall pass to the buyer upon delivery F.O.B. at the seller's place of home or business to an agent of the buyer including a common carrier, notwithstanding any prepayment or allowance of freight by the seller.

17. **INSPECTION.** Buyer, upon receiving possession of Goods, shall have a reasonable opportunity to inspect the Goods to determine if the Goods conform to the requirements of this Contract. If Buyer, in good faith, determines that all or a portion of the Goods are non-conforming, Buyer may return the Goods to Seller at Buyer's expense. Buyer agrees to securely mail the goods back to buyer with electronic tracking to the address listed above.

18. **PAYMENT.** Payment due shall be made to Xflight Technologies LLC by cash, bank transfer, credit card or PayPal prior to shipment of Goods. If an invoice is not paid when due, seller will not ship Goods to Buyer. In addition to any other right or remedy provided by law, if Buyer fails to pay for the Goods when due or reverses credit card charges after shipment of Goods, Seller has the option to treat such failure to pay as a material breach of this Contract, and may cancel this Contract and/or seek legal remedies.

19. **PAYMENT OF TAXES.** Buyer agrees to pay all taxes of every description, country, federal, state, and municipal, that arise as a result of this sale, excluding income taxes.